MINIMUM PAIR DEGREE CONDITION FOR TIGHT HAMILTONIAN CYCLES IN 4-UNIFORM HYPERGRAPHS

JOANNA POLCYN, CHRISTIAN REIHER, VOJTĚCH RÖDL, ANDRZEJ RUCIŃSKI, MATHIAS SCHACHT, AND BJARNE SCHÜLKE

Dedicated to Endre Szemerédi on the occasion of his 80th *birthday*

Abstract. We show that every 4-uniform hypergraph with n vertices and minimum pair degree at least $(5/9 + o(1))n^2/2$ contains a tight Hamiltonian cycle. This degree condition is asymptotically optimal.

§1. Introduction

We study hypergraph generalisations of Dirac's theorem for graphs. For hypergraphs several extensions were considered and Endre Szemerédi has been an integral part and driving force for these developments. All but the last author already had the pleasure to collaborate with and learn from Endre, while working on related (and unrelated) problems.

1.1. Background and main result.

G. A. Dirac [2] showed that every (finite) graph $G = (V, E)$ on at least 3 vertices with minimum degree $\delta(G) \geqslant |V|/2$ contains a Hamiltonian cycle. This result is clearly best possible, as exemplified by slightly off-balanced complete bipartite graphs. Several hypergraph extensions were suggested and considered in the literature. Here we focus on *tight* Hamiltonian cycles in uniform hypergraphs and we briefly review the relevant notation.

For an integer $k \geqslant 2$, a *k-uniform hypergraph* is a pair (V, E), where the *vertex set* V is a finite set and the *edge set* $E \subseteq V^{(k)} = \{U \subseteq V : |U| = k\}$ is some collection of k-element subsets of V. A *tight Hamiltonian cycle* in a k-uniform hypergraph $H = (V, E)$ is given by a cyclic ordering of V such that every k consecutive vertices (in the cyclic ordering) span a hyperedge from E. As usual for $k = 2$, we recover the notion of finite, simple graphs and Hamiltonian cycles.

2010 *Mathematics Subject Classification.* Primary: 05C65. Secondary: 05C45.

Key words and phrases. Hamiltonian cycles, Dirac's theorem, hypergraphs.

The third author is supported by NSF grant DMS 1764385.

The fourth author is supported by Polish NSC grant 2018/29/B/ST1/00426.

The fifth author is supported by the ERC (PEPCo 724903).

For $k > 2$, large part of the research concerns sufficient minimum degree conditions in hypergraphs that guarantee the existence of tight Hamiltonian cycles (see, e.g., the surveys [11, 16] and the references therein for a more thorough discussion). For a set of vertices $S \subseteq V$, the *degree* in H is defined by

$$d_H(S) = \big|\{e \in E \colon S \subseteq e\}\big|$$

and for an integer j with $1 \leqslant j \leqslant k$ the *minimum j-degree* is defined by

$$\delta_j(H) = \min\{d_H(S) \colon S \in V^{(j)}\}\,.$$

The minimum 1-degree $\delta_1(H)$ is often called minimum *vertex degree* and sometimes (in particular, in the context of graphs) we may omit the subscript. Moreover, for $j = 2$ we often refer to $\delta_2(H)$ as the minimum *pair degree*.

Lower bounds on the minimum j-degree bear more information and restrictions for larger values of j and, in fact, sufficient minimum $(k-1)$-degree conditions for tight Hamiltonian cycles were considered first in the literature. This line of research was initiated by Katona and Kierstead [7]. In joint work with the two senior authors, Endre [13] established the following asymptotically optimal result for k-uniform hypergraphs (see also [12] for an earlier result for 3-uniform hypergraphs and [14] for a sharp version of that result).

Theorem 1.1 ($\mathrm{R}^2\mathrm{Sz}$, 2008)**.** *For every integer $k \geqslant 3$ and $\alpha > 0$, there exists an integer n_0 such that every k-uniform hypergraph H on $n \geqslant n_0$ vertices with $\delta_{k-1}(H) \geqslant \big(\frac{1}{2} + \alpha\big)n$ contains a tight Hamiltonian cycle.* □

Theorem 1.1 can be viewed as an approximate generalisation of Dirac's theorem from graphs to hypergraphs and, in fact, the lower bound constructions, that show the optimality of this result, exhibit a similar bipartite structure.

Given the 'monotonicity' of the degree conditions, as a next step it seems natural to consider an extension of Theorem 1.1 with a minimum $(k-2)$-degree condition. For such an extension we have to restrict ourselves to k-uniform hypergraphs for $k \geqslant 3$. Improving a series of partial results by several authors, for 3-uniform hypergraphs the following asymptotically optimal result was recently obtained by Endre in collaboration with the middle four authors [10].

Theorem 1.2 ($\mathrm{R}^3\mathrm{SSz}$, 2019)**.** *For every $\alpha > 0$, there exists an integer n_0 such that every 3-uniform hypergraph H on $n \geqslant n_0$ vertices with $\delta_1(H) \geqslant \big(\frac{5}{9} + \alpha\big)\frac{n^2}{2}$ contains a tight Hamiltonian cycle.* □

Again there are lower bound constructions, showing that the number 5/9 in Theorem 1.2 is best possible. In fact, three structurally different examples can be found in [10, Example 1.2].

Here we extend Theorem 1.2 to 4-uniform hypergraphs with a minimum pair degree condition and establish the following result.

Theorem 1.3. *For every $\alpha > 0$ there exists an integer n_0 such that every 4-uniform hypergraph H on $n \geqslant n_0$ vertices with $\delta_2(H) \geqslant \left(\frac{5}{9} + \alpha\right)\frac{n^2}{2}$ contains a tight Hamiltonian cycle.*

Theorem 1.3 is also asymptotically best possible as the following examples of Han and Zhao [5] show:

(*a*) For simplicity let $n = |V|$ be divisible by three and consider a partition $X \cup Y = V$ with $|X| = 2n/3$. Let H be the 4-uniform hypergraph $H = (V, E)$ with $e \in V^{(4)}$ being an edge of H if, and only if,

$$|e \cap X| \neq 2\,. \tag{1.1}$$

It is easy to check that H satisfies $\delta_2(H) \geqslant \left(\frac{5}{9} - o(1)\right)\frac{n^2}{2}$.

Suppose for the sake of contradiction that H contains a tight Hamiltonian cycle C. Since every vertex of C is contained in precisely four edges of C, we have

$$\sum_{f \in E(C)} |f \cap X| = 4\,|X|\,.$$

Hence, the average intersection of an edge of C with X is $8/3$. In particular, there exist two edges f and f' in C such that

$$|f \cap X| \leqslant 2 = \lfloor \tfrac{8}{3} \rfloor \qquad \text{and} \qquad |f' \cap X| \geqslant 3 = \lceil \tfrac{8}{3} \rceil$$

and the definition of H implies that f shares at most one vertex with X.

On the other hand, the sizes of the intersections in X of two consecutive edges in C (in the induced cyclic order) can differ by at most one. Consequently, the lack of edges in E intersecting X in exactly two vertices makes the occurrence of the edges f and f' in C impossible.

(*b*) The same construction with (1.1) replaced by $|e \cap X| \neq 3$ yields another hypergraph exemplifying a matching lower bound for Theorem 1.3 by a similar argument.

The type of construction used in (*a*) and (*b*) above generalises to arbitrary uniformities $k \geqslant 3$. In fact, if $3 \mid k$ then this gives rise to three structurally different lower bound constructions and if $3 \nmid k$ then two hypergraphs arise (see [5, Corollary 1.6] for details). Those examples show that the optimal minimum $(k-2)$-degree for tight Hamiltonian cycles in k-uniform hypergraphs on n vertices is at least $\left(\frac{5}{9} - o(1)\right)\frac{n^2}{2}$.

The results discussed so far address special cases of the following more general problem: Given integers $k > r \geqslant 1$, determine the infimal real number $\alpha_r^{(k)} \in [0, 1]$ with the property

that every k-uniform hypergraph $H = (V, E)$ satisfying the minimum r-degree condition $\delta_r(H) \geqslant \big(\alpha_r^{(k)} + o(1)\big)|V|^{k-r}/(k-r)!$ contains a Hamiltonian cycle. Thus Dirac's theorem and Theorem 1.1 assert $\alpha_{k-1}^{(k)} = 1/2$ for $k \geqslant 2$, while the Theorems 1.2 and 1.3 entail $\alpha_1^{(3)} = \alpha_2^{(4)} = 5/9$. These results might indicate that $\alpha_r^{(k)}$ might be determined by the difference $d = k - r$, which leads to the following question.

Question 1.4. Given a positive integer d, does there exist a constant β_d such that $\alpha_{k-d}^{(k)} = \beta_d$ holds for every $k \geqslant d + 1$?

We are not aware of any counterexample and for $d = 1$ Theorem 1.1 states that $\beta_1 = 1/2$. Moreover, very recently Theorems 1.2 and 1.3 were extended for arbitrary $k \geqslant 5$ in [9] and $\beta_2 = 5/9$ was established. The lower bounds on $\alpha_r^{(k)}$ obtained by Han and Zhao [5] might be optimal for all $k > r \geqslant 1$. In this case, all numbers β_d would exist and the next problem would be to decide whether $\beta_3 = 5/8$.

1.2. **Overview and organisation.** The proof of Theorem 1.3 is based on the *absorption method*. This method has been introduced more than a decade ago in [12] (see also the survey [15] of Endre Szemerédi) and since then it has turned out to be a versatile tool for solving a variety of problems concerning the existence of spanning structures in graphs and hypergraphs. Proofs based on the absorption method usually decompose the problem at hand into several more manageable subproblems. In results on Hamiltonian cycles in hypergraphs such as Theorem 1.3 most of the effort is usually directed towards showing a *connecting lemma*, an *absorbing lemma*, and a *covering lemma*.

The complexity of the first two ingredients has evolved over time. For instance, in the proof of Theorem 1.1 for $k = 3$ in [12], the connecting lemma just said that every pair of vertices can be connected to any other pair of vertices by means of a relatively short tight path. An analogous result is not available when proving Theorem 1.2 (see [10]). Instead, one defines a sufficiently broad class of so-called *connectable pairs* of vertices and, roughly speaking, the connecting lemma of [10] asserts that any such connectable pair can be reached from any other connectable pair by means of a short tight path. This idea will be reused below, so we shall define a notion of connectable triples in 4-uniform hypergraphs of large pair degree and our connecting lemma (Proposition 3.3 below) claims that any two such triples can be connected by means of a short tight path.

As for the absorbing lemma (see Proposition 5.1), one needs to establish the existence of a so-called *absorbing path* P_A capable of absorbing any "small" set of left-over vertices Z. More precisely, no matter which small set Z of vertices needs attention in the end of the argument there always is a path with vertex set $V(P_A) \cup Z$ which starts and ends with the same vertices as P_A itself. Such a path P_A is usually constructed by taking

several small building blocks called *absorbers* and connecting them by appealing to the connecting lemma. Proving the existence of suitable absorbers has often been among the main difficulties in applying the absorption method. Recently, the first two authors, while studying a related problem, observed that in many cases this problem can be reduced to a degenerate Turán-type problem [8]. In fact, ignoring for a moment the issue that the absorbers need to be connectable into a tight path, their existence is a direct consequence of a classical extremal result of Erdős [3], for the small price that the size of Z needs to satisfy an additional divisibility assumption (see § 5.1 for more details).

Finally, the covering lemma (see Proposition 6.1) asserts, in particular, that the minimum pair degree condition considered in Theorem 1.3 ensures the existence of an almost perfect path cover. Then the connecting lemma allows us to connect the paths from the cover together with P_A. In fact, there even exists a cycle C containing paths from the cover and the absorbing path P_A for which the (small) set $Z = V(H) \setminus V(C)$ of remaining vertices satisfies the aforementioned divisibility condition. Now, to complete the proof of Theorem 1.3 one just needs to absorb the vertices outside C into the absorbing path.

As mentioned above, the proof of Theorem 1.3 presented here reuses some ideas and results from [10] and we collect the relevant material in the next section. Sections 3 – 6 establish the connecting lemma, absorbing lemma, covering lemma, and the so-called *reservoir lemma*, which ensures that the short tight paths used for the connections are always vertex disjoint from the rest. In Section 7 we then present the somewhat standard proof of Theorem 1.3 based on these lemmata.

§2. Preliminaries

2.1. **Notation.** Besides graphs, we mainly consider 3-uniform and 4-uniform hypergraphs, and here we briefly recall some relevant definitions. For simplicity, if there is no danger of confusion we sometimes omit parentheses, braces, and commas and denote edges $\{x, y\}$, $\{x, y, z\}$, or $\{x, y, z, w\}$ in graphs and 3- and 4-uniform hypergraphs by xy, xyz, or $xyzw$, respectively.

Walks, paths, and cycles. We shall only consider tight walks, paths, and cycles and for simplicity we omit the word tight from now on. The length of a walk, a path, or a cycle is measured by its number of edges.

For 3-uniform hypergraphs a *walk* W of length $\ell \geqslant 0$ is given by a sequence $(x_1, \dots, x_{\ell+2})$ of vertices such that $e \in E(W)$ if and only if $e = x_i x_{i+1} x_{i+2}$ for some $i \in [\ell]$. The ordered pairs (x_1, x_2) and $(x_{\ell+1}, x_{\ell+2})$ are the *end-pairs* of W and we say W is a (x_1, x_2)-$(x_{\ell+1}, x_{\ell+2})$-walk. This definition of end-pairs is not symmetric and implicitly fixes a direction of W and sometimes we may refer to (x_1, x_2) and $(x_{\ell+1}, x_{\ell+2})$ as *starting pair* and *ending pair*,

respectively. The vertices $x_3, \dots, x_\ell$ are the *inner vertices* of W and in the context of walks we count the inner vertices with their multiplicities, i.e., for $\ell \geqslant 2$ a walk of length ℓ has $\ell-2$ inner vertices. We often identify a walk with the sequence of its vertices $x_1x_2\dots x_{\ell+2}$ and refer to it as a x_1x_2-$x_{\ell+1}x_{\ell+2}$-walk.

A walk W is a *path* if all the vertices $x_1, \dots, x_{\ell+2}$ are distinct and it is a *cycle* if the vertices $x_1, \dots, x_\ell$ are distinct and $x_{\ell+1} = x_1$ and $x_{\ell+2} = x_2$.

These definitions extend to 4-uniform hypergraphs in a straightforward way. In this context a walk of length ℓ is given by a sequence of $\ell + 3$ vertices and the *end-triples* are the subsequences of the first and the last three vertices.

Links of vertices and pairs. We recall that the *link graph* of a vertex v of a 3-uniform hypergraph H is defined to be the graph H_v with the same vertex set as H and with

$$E(H_v) = \{xy \colon vxy \in E(H)\}\,.$$

Similarly, for a 4-uniform hypergraph H the link H_v of a vertex v is a 3-uniform hypergraph on the same vertex set with $E(H_v) = \{xyz \colon vxyz \in E(H)\}$. Moreover, for an unordered pair of distinct vertices u and v the *link of the pair* uv is the graph H_{uv} with vertex set $V(H_{uv}) = V(H)$ and edge set

$$E(H_{uv}) = \{xy \colon uvxy \in E(H)\}\,.$$

2.2. **Robust subgraphs.** Both in the 3-uniform predecessor [10] of this work and here the connecting lemma is deduced from certain connectivity properties of 2-uniform link graphs. In the present subsection we discuss the graph theoretic result we shall require for this purpose. We begin with the key notion in this regard (cf. [10, Definition 2.2]).

Definition 2.1. *Given $\beta > 0$ and $\ell \in \mathbb{N}$ a graph R is said to be (β, ℓ)-robust if for any two distinct vertices x and y of R the number of x-y-paths of length ℓ is at least $\beta|V(R)|^{\ell-1}$.*

The main point is that graphs whose density is larger than 5/9 possess sufficiently dense robust subgraphs containing more than two thirds of the vertices. The following result along those lines is a slight strengthening of [10, Proposition 2.3] and below we shall only indicate how the arguments in [10] can be modified so as to yield the present version.

Proposition 2.2. *Given α, $\mu > 0$, there exist $\beta > 0$ and an odd integer $\ell \geqslant 3$ such that for sufficiently large n, every n-vertex graph $G = (V, E)$ with $|E| \geqslant \left(\frac{5}{9} + \alpha\right)\frac{n^2}{2}$ contains a (β, ℓ)-robust induced subgraph $R \subseteq G$ satisfying*

(i) $|V(R)| \geqslant \left(\frac{2}{3} + \frac{\alpha}{2}\right)n$,
(ii) $e_G\big(V(R), V \smallsetminus V(R)\big) \leqslant \mu n^2$,
(iii) and $e(R) \geqslant \left(\frac{5}{9} + \frac{\alpha}{2}\right)\frac{n^2}{2} - \frac{(n-|V(R)|)^2}{2} \geqslant \left(\frac{4}{9} + \frac{2}{3}\alpha\right)\frac{n^2}{2}$.

Proof. We may assume $\alpha \leqslant 4/9$, for otherwise there are no n-vertex graphs (V, E) satisfying $|E| \geqslant \left(\frac{5}{9} + \alpha\right) \frac{n^2}{2}$ and there is nothing to show. The proof of [10, Lemma 3.2] shows for every fixed $\mu' \leqslant \alpha/72$ that every graph $G = (V, E)$ on $n \gg 1/\mu'$ vertices such that $|E| \geqslant \left(\frac{5}{9} + \alpha\right) \frac{n^2}{2}$ has an induced subgraph R satisfying *(i)*,

$$e_G\big(V(R), V \smallsetminus V(R)\big) < 4\mu' n^2 \,, \tag{2.1}$$

and the first estimate in *(iii)* which, moreover, has a property called μ'-inseparability (see [10, Definition 3.1]). For the purposes of [10] it was enough to apply this fact to $\mu' = \alpha/72$ itself, but here it will be more convenient to set $\mu' = \min\{\mu/4, \alpha/72\}$, which causes (2.1) to imply *(ii)*. The second estimate in *(iii)* is an immediate consequence of *(i)* and of $\alpha \leqslant 4/9 < 2/3$.

It remains to show that R is indeed (β, ℓ)-robust for some constants β and ℓ that only depend on α and μ but not on n. As the proof of [10, Proposition 2.3] shows, this follows from the μ'-inseparability of R combined with the fact that *(i)* and *(iii)* allow us to bound the density of R from below. In fact, it is enough to let ℓ be the least odd integer such that

$$\ell > 8\left(\frac{1}{\mu'}\right)^2 + 1 \quad \text{and to set} \quad \beta = \frac{1}{72}\left(\frac{\mu'}{2}\right)^{6\ell} . \qquad \square$$

The next result will assist us (indirectly via Lemma 2.10) in Section 5 when we wish to ensure that the end-triples of our absorbers are connectable. Notice that the assumptions on R are like clause *(i)* and the special case $\mu = \alpha/4$ of clause *(ii)* of Proposition 2.2.

Lemma 2.3. *Given $\alpha > 0$, let $G = (V, E)$ and $G' = (V, E')$ be two graphs on the same n-element vertex set, each with at least $(5/9 + \alpha)n^2/2$ edges. Let R be a subgraph of G induced by a set $U = V(R) \subseteq V$ with $|U| \geqslant 2n/3$ that satisfies $e_G(U, V \smallsetminus U) \leqslant \alpha n^2/4$. Then*

$$\big|\{(u, v) \in U^2 \colon uv \in E \cap E' \text{ and } d_R(v) > n/3\}\big| \geqslant \frac{3}{4}\alpha n^2 \,. \tag{2.2}$$

Proof. Let $Z = \{z \in U \colon d_R(z) > n/3\}$. We shall show

$$\big|\{xy \in E \cap E' \colon x, y \in U \text{ and } \{x, y\} \cap Z \neq \varnothing\}\big| \geqslant \frac{3}{4}\alpha n^2 \,. \tag{2.3}$$

Since every (unordered) edge xy counted here corresponds to one or two ordered pairs (u, z) counted on the left side of (2.2) (depending on whether only one or both of x, y are in Z), this will imply the desired estimate (2.2). For the proof of (2.3) we let $\eta \in [2/3, 1]$ and $\tau \in [0, 1]$ be defined by

$$|U| = \eta n \qquad \text{and} \qquad |Z| = \tau n \,.$$

We consider two cases depending on the value of τ.

First Case. We have $\tau \geqslant 2/3$.

Owing to

$$\big|\{(x,y) \in V^2 \colon xy \in E \cap E'\}\big| \geqslant 2\,|E| + 2\,|E'| - n^2 \geqslant \big(\tfrac{1}{9} + 2\alpha\big)n^2$$

and $|V \smallsetminus Z|^2 = (1-\tau)^2 n^2 \leqslant n^2/9$ we have

$$\big|\{(x,y) \in V^2 \colon xy \in E \cap E' \text{ and } \{x,y\} \cap Z \neq \varnothing\}\big| \geqslant 2\alpha n^2\,.$$

Recall that $Z \subseteq U$. So if $\{x,y\} \cap Z \neq \varnothing$, but $\{x,y\} \nsubseteq U$, then one of the vertices x, y is in U while the other one is in $V \smallsetminus U$, whence

$$\big|\{(x,y) \in V^2 \colon xy \in E\,, \{x,y\} \cap Z \neq \varnothing, \text{ and } \{x,y\} \nsubseteq U\}\big| \leqslant 2\,e_G(U, V \smallsetminus U) \leqslant \frac{\alpha}{2} n^2\,.$$

Consequently, the number of (unordered) edges xy considered on the left-hand side of (2.3) is at least $\frac{1}{2}(2\alpha n^2 - \alpha n^2/2) = 3\alpha n^2/4$, as desired.

Second Case. We have $\tau < 2/3$.

Notice that

$$2\,e(R) \geqslant 2\big(e(G) - e_G(U, V \smallsetminus U) - e_G(V \smallsetminus U)\big) \geqslant \Big(\frac{5}{9} + \alpha - \frac{\alpha}{2} - (1-\eta)^2\Big)n^2\,.$$

Together with $(1-\eta)(2/3-\eta) \leqslant 0$ this yields

$$2\,e(R) \geqslant \Big(\frac{5}{9} + \frac{\alpha}{2} - (1-\eta)^2 + (1-\eta)\Big(\frac{2}{3} - \eta\Big)\Big)n^2 = \Big(\frac{2}{9} + \frac{\alpha}{2} + \frac{\eta}{3}\Big)n^2\,. \tag{2.4}$$

On the other hand, the definition of Z leads to

$$2\,e(R) = \sum_{z \in Z} d_R(z) + \sum_{z \in U \smallsetminus Z} d_R(z) \leqslant \sum_{z \in Z} d_R(z) + \frac{(\eta - \tau)}{3} n^2\,. \tag{2.5}$$

Comparing (2.4) and (2.5) we deduce

$$\sum_{z \in Z} d_R(z) \geqslant \Big(\frac{2}{9} + \frac{\alpha}{2} + \frac{\eta}{3} - \frac{\eta - \tau}{3}\Big)n^2 = \Big(\frac{2}{9} + \frac{\alpha}{2} + \frac{\tau}{3}\Big)n^2\,.$$

By the assumption of the case we have

$$\frac{\tau}{3} n^2 > \frac{\tau^2}{2} n^2 \geqslant \binom{|Z|}{2}$$

and this shows that

$$\sum_{z \in Z} d_R(z) \geqslant \Big(\frac{2}{9} + \frac{\alpha}{2}\Big)n^2 + \binom{|Z|}{2}\,,$$

which in turn implies

$$\big|\{xy \in E \colon x, y \in U \text{ and } \{x,y\} \cap Z \neq \varnothing\}\big| \geqslant \sum_{z \in Z} d_R(z) - \binom{|Z|}{2} \geqslant \Big(\frac{2}{9} + \frac{\alpha}{2}\Big)n^2\,.$$

Finally, the sieve formula yields

$$\big|\{xy \in E \cap E' \colon x, y \in U \text{ and } \{x,y\} \cap Z \neq \varnothing\}\big| \geqslant \left(\frac{4}{9}+\alpha\right)\frac{n^2}{2} + \left(\frac{5}{9}+\alpha\right)\frac{n^2}{2} - \binom{n}{2} \geqslant \alpha n^2\,,$$

which is more than what we need for establishing (2.3). □

2.3. **Connectable pairs and bridges in 3-uniform hypergraphs.** In this subsection we discuss the 3-uniform connecting lemma from [10] together with some related results. Roughly speaking, this lemma asserts that in any sufficiently large 3-uniform hypergraph $H = (V, E)$ with $\delta_1(H) \geqslant (5/9 + \alpha)|V|^2/2$ any two pairs of vertices possessing a special property called connectability can be connected by many short paths. The definition of our connectability notion presupposes that for every vertex $v \in V(H)$, one has fixed a robust subgraph of its link graph as obtained by Proposition 2.2. We collect these assumptions in the following setup.

Setup 2.4. *Suppose that $\alpha \in (0, 1/3)$, that μ, $\beta > 0$, that $\ell \geqslant 3$ is an odd integer, that $H = (V, E)$ is a sufficiently large 3-uniform hypergraph with $\delta_1(H) \geqslant (5/9 + \alpha)|V|^2/2$, and that for every vertex $v \in V$, Proposition 2.2 located a (β, ℓ)-robust induced subgraph $R_v \subseteq H_v$ of its link graph satisfying*

- *(i)* $|V(R_v)| \geqslant \left(\frac{2}{3} + \frac{\alpha}{2}\right)|V|$,
- *(ii)* $e_{H_v}\big(V(R_v), V \smallsetminus V(R_v)\big) \leqslant \mu|V|^2$,
- *(iii) and* $e(R_v) \geqslant \left(\frac{5}{9} + \frac{\alpha}{2}\right)\frac{|V|^2}{2} - \frac{(|V|-|V(R_v)|)^2}{2} \geqslant \left(\frac{4}{9} + \frac{2}{3}\alpha\right)\frac{|V|^2}{2}$.

We remark that for most part of this section condition *(ii)* with $\mu = \alpha/4$ of this setup suffices. In fact, the results in [10] were obtained for this restricted version of the setup and below we (mostly) recapitulate and apply them in this form. A stronger form, with a smaller value of μ, of Proposition 2.2 *(ii)* will be useful in Lemma 2.10 below and for the construction of the absorbing path in Section 5. The following notion of connectable pairs is taken from [10, Definition 2.5].

Definition 2.5. *Given Setup 2.4 and $\zeta > 0$, an unordered pair xy of distinct vertices of H is said to be ζ-connectable if the set*

$$U_{xy} = \{v \in V \colon xy \in E(R_v)\}$$

satisfies $|U_{xy}| \geqslant \zeta|V|$. An ordered pair (x, y) is ζ-connectable if its underlying unordered pair xy is.

We are now ready to state the 3-uniform connecting lemma from [10, Proposition 2.6].

Proposition 2.6 (Connecting lemma for 3-uniform hypergraphs)**.** *Given Setup 2.4 (with $\mu = \alpha/4$) and $\zeta > 0$, there exists $\vartheta = \vartheta(\alpha, \beta, \ell, \zeta) > 0$ such that the following holds.*

If (a,b), (x,y) are two disjoint ζ-connectable pairs of vertices of H, then the number of ab-xy-paths in H with $3\ell+1$ inner vertices is at least $\vartheta|V|^{3\ell+1}$. □

For later use we also state the following simple fact (see [10, Fact 4.1]).

Lemma 2.7. *Given Setup 2.4 (with $\mu=\alpha/4$) and $\zeta>0$, there are at most $\zeta|V|^3$ triples $(x,y,z)\in V^3$ such that $xy\in E(R_z)$, but xy is not ζ-connectable in H.* □

To extend these notions and results to 4-uniform hypergraphs we need a new 3-uniform concept.

Definition 2.8. *Given Setup 2.4 and $\zeta>0$, a triple $(x,y,z)\in V^3$ is called a ζ-bridge in H if $xyz\in E$ and xy and yz are both ζ-connectable in H. We say a path $x_1x_2\dots x_{j-1}x_j$ starts (resp. ends) with a ζ-bridge, if $x_1x_2x_3$ (resp. $x_{j-2}x_{j-1}x_j$) is a ζ-bridge.*

It will be useful to estimate the number of bridges in a dense 3-uniform hypergraph.

Lemma 2.9. *Given Setup 2.4 (with $\mu=\alpha/4$) and $\zeta>0$, the number of triples $(x,y,z)\in V^3$ with $xyz\in E$ that fail to be a ζ-bridge in H is at most $(2/9+\alpha/2+2\zeta)|V|^3$. In particular, if $\zeta<\alpha/4$, then there are more than $|V|^3/3$ ζ-bridges in H.*

Proof. Starting with $A=\{(x,y,z)\in V^3\colon xyz\in E\}$ we note that the minimum degree assumption yields $|A|\geqslant(5/9+\alpha)|V|^3$. We consider four exceptional subsets of A, namely

$$P_1=\{(x,y,z)\in A\colon xy\notin E(R_z)\}\,,\quad Q_1=\{(x,y,z)\in A\smallsetminus P_1\colon\ xy \text{ is not } \zeta\text{-connectable}\}\,,$$
$$P_2=\{(x,y,z)\in A\colon yz\notin E(R_x)\}\,,\quad Q_2=\{(x,y,z)\in A\smallsetminus P_2\colon\ yz \text{ is not } \zeta\text{-connectable}\}\,.$$

Notice that every triple in $A\smallsetminus(P_1\cup Q_1\cup P_2\cup Q_2)$ is a ζ-bridge in H. Lemma 2.7 yields the upper bounds $|Q_1|$, $|Q_2|\leqslant\zeta|V|^3$. Moreover, the first two clauses of Setup 2.4 and $\alpha\leqslant 1/3$ lead to

$$\begin{aligned}|P_1|&\leqslant\sum_{z\in V}\Big(2\,e_{H_z}(V(R_z),V\smallsetminus V(R_z))+(n-|V(R_z)|)^2\Big)\\&\leqslant\left(\frac{\alpha}{2}+\left(\frac{1}{3}-\frac{\alpha}{2}\right)^2\right)|V|^3\\&\leqslant\left(\frac{1}{9}+\frac{\alpha}{4}\right)|V|^3\,.\end{aligned}$$

The same upper bound applies to $|P_2|$. These upper bounds on $|Q_1|$, $|Q_2|$ and $|P_1|$, $|P_2|$ yield the desired upper bound on $|P_1\cup Q_1\cup P_2\cup Q_2|$ for the first part of the lemma.

The second part is a direct consequence, since $A\smallsetminus(P_1\cup Q_1\cup P_2\cup Q_2)$ is a subset of all ζ-bridges in H and

$$\big|A\smallsetminus(P_1\cup Q_1\cup P_2\cup Q_2)\big|\geqslant\Big(\frac{5}{9}+\alpha\Big)|V^3|-\Big(\frac{2}{9}+\frac{\alpha}{2}+2\zeta\Big)|V^3|>\frac{|V|^3}{3}$$

as long as $\zeta < \alpha/4$. $\square$

The next lemma implies that every two 3-uniform hypergraphs H and H' on the same vertex set V with minimum vertex degree $(5/9 + o(1))|V|^2/2$ have the property that H' contains many bridges of H as edges. (For technical reasons it will be convenient to allow that the vertex sets of H and H' differ slightly.) Note that the lower bound on the number of bridges in Lemma 2.9 falls short of implying such an assertion. In fact, the proof of the following lemma will rely on the structural properties of hypergraphs and bridges.

Lemma 2.10. *Given Setup 2.4 with $\mu = \frac{\alpha^3}{18}$ for a 3-uniform hypergraph $H = (V, E)$ with $|V| = n$, let $\zeta \in (0, \alpha^2/9)$, and let $H' = (V', E')$ be a 3-uniform hypergraph with $\delta_1(H') \geqslant (5/9 + \alpha)n^2/2$ and $|V \triangle V'| \leqslant \alpha n/18$. Then the number of ζ-bridges $(x, y, z) \in V^3$ in H such that $xyz \in E'$ is at least $\alpha n^3/2$.*

Proof. Let $H = (V, E)$ and $H' = (V', E')$ satisfy the assumptions of the lemma. In particular, for every vertex $v \in V$ we fixed a robust subgraph $R_v \subseteq H_v$. We consider the following set of triples

$$T = \big\{(x, y, z) \in V^3 \colon xy \in E(H_z) \cap E(H'_z)\,,\ x, y \in V(R_z)\,,\ \text{and } d_{R_z}(x) > (\tfrac{1}{3} - \tfrac{\alpha}{54})n\big\}\,.$$

We shall appeal to Lemma 2.3 for a lower bound on $|T|$. For that we have to restrict to the subhypergraphs and subgraphs induced on $W = V \cap V'$. We consider

$$T[W] = \big\{(x, y, z) \in W^3 \colon xy \in E(H_z[W]) \cap E(H'_z[W])\,,\\ x, y \in V(R_z) \cap W\,,\ \text{and } d_{R_z[W]}(x) > |W|/3\big\}\,.$$

Note that the bound on the symmetric difference $V \triangle V'$ guarantees a minimum vertex degree of at least $(5/9 + 8\alpha/9)n^2/2$ for $H[W]$ and $H'[W]$. Moreover, for every $z \in W$ we have

$$|V(R_z) \cap W| \geqslant \Big(\frac{2}{3} + \frac{\alpha}{2}\Big)n - \frac{\alpha}{18}n \geqslant \frac{2}{3}|W|$$

and

$$e_{H_z}\big(V(R_z) \cap W, W \smallsetminus V(R_z)\big) \leqslant e_{H_z}\big(V(R_z), V \smallsetminus V(R_z)\big) \leqslant \mu n^2 = \frac{\alpha^3}{18}n^2 \leqslant \frac{\alpha}{4}|W|^2\,.$$

Consequently, for every $z \in W$ we can apply Lemma 2.3 to $G = H_z[W]$, $G' = H'_z[W]$, and $R = R_z[W] \subseteq H_z[W]$ and (2.2) tells us that

$$\big|T[W]\big| \geqslant \frac{3}{4} \cdot \frac{8}{9}\alpha|W|^3 \geqslant \frac{3}{4} \cdot \frac{8}{9}\alpha\Big(1 - \frac{\alpha}{18}\Big)^3 n^3 \geqslant \frac{5}{8}\alpha n^3\,.$$

The definitions of T and $T[W]$ imply $T[W] \subseteq T$ and, hence, we arrive at

$$|T| \geqslant \frac{5}{8}\alpha n^3\,. \tag{2.6}$$

We shall bound the sizes of the following 'bad' subsets of T

$$S_1 = \{(x,y,z) \in T \colon xy \text{ is not a } \zeta\text{-connectable pair in } H\}$$
$$\text{and} \quad S_2 = \{(x,y,z) \in T \colon yz \text{ is not a } \zeta\text{-connectable pair in } H\}\,.$$

By definition of T, every triple $(x,y,z) \in T$ corresponds to an edge in $E \cap E'$ and by definition of S_1 and S_2, every triple in $T \smallsetminus (S_1 \cup S_2)$ is a ζ-bridge in H. Hence in view of (2.6), the conclusion of Lemma 2.10 will follow from the estimates

$$|S_1| \leqslant \zeta n^3 \qquad \text{and} \qquad |S_2| \leqslant \Big(\zeta + \frac{\alpha^3}{18} + \frac{\alpha^2}{8}\Big) n^3 \tag{2.7}$$

combined with $\alpha < 1/3$ (cf. Setup 2.4) and $\zeta < \alpha^2/9$.

The desired upper bound on the size of S_1 is a direct consequence of Lemma 2.7. In fact by definition of T, for every $(x,y,z) \in T$ we have $xy \in E(H_z)$ and $x,\, y \in V(R_z)$. Since $R_z \subseteq H_z$ is an induced subgraph, it follows that $xy \in E(R_z)$ and Lemma 2.7 applies.

In order to prove the second inequality of (2.7) we note that $xy \in E(H_z)$ is equivalent to $yz \in E(H_x)$ and thus we can apply the same argument as above to the subset

$$S_2' = \{(x,y,z) \in S_2 \colon y \in V(R_x) \text{ and } z \in V(R_x)\}$$

and Lemma 2.7 tells us $S_2' \leqslant \zeta |V|^3$. Next we bound the size of $S_2 \smallsetminus S_2'$ by splitting it into the sets

$$S_2'' = \{(x,y,z) \in S_2 \colon y \notin V(R_x) \text{ and } z \in V(R_x)\} \;\text{ and }\; S_2''' = \{(x,y,z) \in S_2 \colon z \notin V(R_x)\}\,.$$

Summarising the discussion above, we note that the proof of (2.7) reduces to showing that

$$\big|S_2''\big| \leqslant \frac{\alpha^3}{18} n^3 \qquad \text{and} \qquad \big|S_2'''\big| \leqslant \frac{\alpha^2}{8} n^3\,. \tag{2.8}$$

For the bound on $|S_2''|$ we appeal for every $x \in V$ to part *(ii)* of Setup 2.4 for $R_x \subseteq H_x$. For every vertex $x \in V$ there are at most $\mu n^2 = \alpha^3 n^2/18$ pairs $(y,z) \in (V \smallsetminus V(R_x)) \times V(R_x)$ with $yz \in E(H_x)$. Since the definition of $T \supseteq S_2''$ ensures $xy \in E(H_z)$ and, hence, by symmetry also $yz \in E(H_x)$, the desired bound on $|S_2''|$ stated in (2.8) follows.

For the bound on $|S_2'''|$ we consider the set of pairs

$$P = \{(x,z) \in V^2 \colon d_{R_z}(x) > (\tfrac{1}{3} - \tfrac{\alpha}{54})n \text{ and } z \notin V(R_x)\}$$

and we observe that the definitions of T and S_2''' yield

$$\big|S_2'''\big| \leqslant |P| \cdot n\,.$$

For the bound on P we consider an arbitrary vertex $x \in V$. Since

$$d_{R_z}(x) \leqslant d_{H_z}(x) = d_H(x,z) = d_{H_x}(z)$$

we are interested in the number of vertices $z \notin V(R_x)$ with $d_{H_x}(z) > (\frac{1}{3} - \frac{\alpha}{54})n$. Owing to part (i) of Setup 2.4 for $R_x \subseteq H_x$ there are at least

$$d_{H_x}(z) - \big|V \smallsetminus V(R_x)\big| > \Big(\frac{1}{2} - \frac{1}{54}\Big)\alpha n = \frac{26}{54}\alpha n$$

edges of $E_{H_x}\big(V(R_x), V \smallsetminus V(R_x)\big)$ incident to such a vertex z. Therefore, part (ii) of Setup 2.4 implies that for every fixed x there are at most

$$\frac{e_{H_x}\big(V(R_x), V \smallsetminus V(R_x)\big)}{26\alpha n/54} \leqslant \frac{\alpha^3 n^2/18}{26\alpha n/54} \leqslant \frac{\alpha^2}{8} n$$

choices of z. Consequently, $|P| \leqslant \alpha^2 n^2/8$ and the bound on $|S_2'''|$ from (2.8) follows. This concludes the proof of Lemma 2.10. □

An interesting feature of Proposition 2.6 caused by the proof strategy pursued in [10] is that the number of inner vertices in the connections it provides is necessarily congruent to 1 modulo 3. In §2.4 below it will be convenient to employ connections whose numbers of inner vertices are in other residue classes modulo 3. As the following result shows, such connections can be accomplished by going "via bridges".

Corollary 2.11. *Given Setup 2.4 (with $\mu = \alpha/4$) and $\zeta > 0$, there exist three integers $\ell_1, \ell_2, \ell_3 \leqslant 12\ell$ with $\ell_i \equiv i \pmod 3$ for all $i \in [3]$ and $\vartheta = \vartheta(\alpha, \beta, \ell, \zeta) > 0$ such that the following holds.*

If (a, b), (x, y) are two disjoint ζ-connectable pairs of vertices of H, then for every $i \in [3]$, the number of ab-xy-paths in H with ℓ_i inner vertices is at least $\vartheta|V|^{\ell_i}$.

Proof. We set

$$\ell_1 = 3\ell + 1\,, \qquad \ell_2 = 6\ell + 5\,, \qquad \ell_3 = 9\ell + 9\,, \qquad \text{and} \qquad \vartheta = \frac{\vartheta_1^3}{25}\,,$$

where ϑ_1 is provided by Proposition 2.6. Since $\ell \geqslant 3$, we have $\ell_1 \leqslant \ell_2 \leqslant \ell_3 \leqslant 12\ell$. We already know that ℓ_1 has the desired property by Proposition 2.6 and we shall verify the corollary for ℓ_2 and ℓ_3.

Starting with the argument for ℓ_2, we let any two disjoint ζ-connectable pairs (a, b) and (x, y) be given. Notice that if (u, v, w) is a ζ-bridge, $abPuv$ is an ab-uv-path with ℓ_1 inner vertices, and $vwQxy$ is a vw-xy-path with ℓ_1 inner vertices, then $abPuvwQxy$ is an ab-xy-walk with $\ell_1 + 3 + \ell_1 = \ell_2$ inner vertices.

By Lemma 2.9 for sufficiently large $|V|$ there are $|V|^3/4$ possibilities to choose the bridge (u, v, w) in such a way that $\{a, b, x, y\} \cap \{u, v, w\} = \varnothing$ and for every such choice of the bridge in the middle, Proposition 2.6 delivers $\vartheta_1|V|^{\ell_1}$ possibilities for P as well as $\vartheta_1|V|^{\ell_1}$ possibilities for Q. So altogether the number of ab-xy-walks with ℓ_2 inner vertices is at least $\vartheta_1^2|V|^{\ell_2}/4$. Since at most $O(|V|^{\ell_2 - 1})$ of them fail to be paths due to containing the

same vertex multiple times, this proves that ℓ_2 has the desired property for $\vartheta < \vartheta_1^2/5$ and sufficiently large $|V|$.

For ℓ_3 we can repeat the same argument once more and get the same conclusion for the choice of $\vartheta = \vartheta_1^3/25$ above. □

2.4. **Path covers in 3-uniform hypergraphs.** Preparing the proof of the 4-uniform covering lemma in Section 6 we shall now prove the following 3-uniform covering principle.

Proposition 2.12. *For all α, $\xi \in (0, 1/3)$ there is an infinite arithmetic progression $P \subseteq 3\mathbb{N}$ such that the following holds.*

Given Setup 2.4 (with $\mu = \alpha/4$), a collection $\mathscr{B} \subseteq V^3$ of ξ-bridges in H with $|\mathscr{B}| \geqslant \xi|V|^3$, and $M \in P$, we can cover all but at most $\xi|V| + M$ vertices of H by vertex-disjoint paths of length M each of which starts and ends with a bridge from $\mathscr{B}$.

Let us remark that while the vertex set V in this statement is assumed to be much larger than α^{-1} and ξ^{-1}, the quantification in Proposition 2.12 allows to consider M to be a function of $|V|$. In the application we have in mind, M will be about $\Theta(\sqrt{|V|})$. Before we come to the proof of Proposition 2.12 itself, we would like to give a brief overview. First of all, in [10] we proved (somewhat implicitly) a similar result, where M is a constant and $|V|$ is very large. Moreover, there everything related to $\mathscr{B}$ is omitted, but instead of this one can demand that the end-pairs of the constructed paths should be $\zeta_{\star\star}$-connectable for a sufficiently small constant $\zeta_{\star\star} \ll \alpha, \xi$ (see Lemma 2.14 below). The idea here for obtaining longer paths (say of length $\sqrt{|V|}$) is that in the beginning of the proof we put a small reservoir set aside, so that in the end we can connect many short paths into a smaller number of longer ones. To this end we require a somewhat standard reservoir lemma (see Lemma 2.13 and Figure 2.1). The length of the longer paths we obtain in this manner depends linearly on the number of short paths we connect, and hence the possible such lengths form an arithmetic progression P. Now we still need to ensure that the paths we construct start and end with bridges from $\mathscr{B}$. This is achieved by putting sufficiently many such bridges aside that are vertex-disjoint among themselves and to the reservoir. At the end of the proof we will then be able to connect the selected bridges to our paths by making further uses of the reservoir.

Lemma 2.13. *For all $\alpha \in (0, 1/3)$ and $\vartheta_\star$, $\zeta_{\star\star} > 0$ there exists $\vartheta_{\star\star} > 0$ with the following property.*

Given Setup 2.4 (with $\mu = \alpha/4$) and the integers $\ell_1, \ell_2, \ell_3 \leqslant 12\ell$ provided by Corollary 2.11, there is a reservoir set $\mathcal{R} \subseteq V$ with $\frac{1}{2}\vartheta_\star^2|V| \leqslant |\mathcal{R}| \leqslant \vartheta_\star^2|V|$ such that for every $\mathcal{R}' \subseteq \mathcal{R}$ with $|\mathcal{R}'| \leqslant \vartheta_{\star\star}|\mathcal{R}|$, every $i \in [3]$, and any two disjoint $\zeta_{\star\star}$-connectable pairs (x, y) and (z, w), there is a xy-zw-path with ℓ_i inner vertices all of which belong to $\mathcal{R} \setminus \mathcal{R}'$.

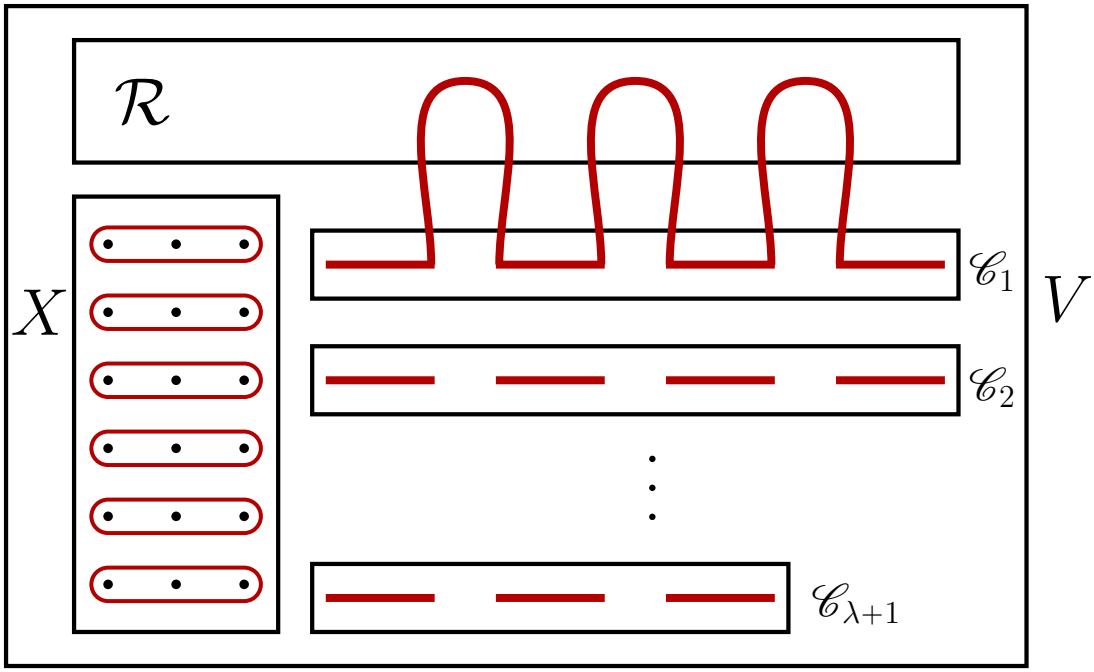

FIGURE 2.1. Collections of small paths, reservoir $\mathcal{R}$, and some bridges from $\mathscr{B}$ form the set X.

Proof. Without loss of generality we may assume $\zeta_{\star\star} < 1/4$. We fix an auxiliary constant η and choose $\vartheta_{\star\star}$ appropriately to obey the hierarchy $\vartheta_{\star\star} \ll \eta \ll \vartheta_\star, \zeta_{\star\star}, \alpha$. Consider a random subset $\mathcal{R} \subseteq V$ including every vertex $v \in V$ independently with probability $\frac{3}{4}\vartheta_\star^2$. It follows from Corollary 2.11 along the lines of the proof of [10, Proposition 2.7] that such a set a.a.s. has the desired size $\frac{1}{2}\vartheta_\star^2|V| \leqslant |\mathcal{R}| \leqslant \vartheta_\star^2|V|$ and possesses the property that for all disjoint $\zeta_{\star\star}$-connectable pairs (x, y) and (z, w) and all $i \in [3]$, the number of xy-zw-paths with ℓ_i inner vertices all of which belong to $\mathcal{R}$ is at least $\eta|\mathcal{R}|^{\ell_i}$. Fix a reservoir set $\mathcal{R} \subseteq V$ with this property. Now, if in addition to the pairs (x, y), (z, w), and to $i \in [3]$, also a set $\mathcal{R}' \subseteq \mathcal{R}$ with $|\mathcal{R}'| \leqslant \vartheta_{\star\star}|\mathcal{R}|$ is given, we know that at most $\ell_i|\mathcal{R}'||\mathcal{R}|^{\ell_i-1} \leqslant 12\ell\vartheta_{\star\star}|\mathcal{R}|^{\ell_i} < \eta|\mathcal{R}|^{\ell_i}$ of these paths can contain an inner vertex from $\mathcal{R}'$, meaning that the desired path with inner vertices only from $\mathcal{R} \smallsetminus \mathcal{R}'$ exists. □

Lemma 2.14. *For all $\alpha \in (0, 1/3)$ and $\vartheta_\star$ with $0 \ll \vartheta_\star \ll \alpha$ there is a $\zeta_{\star\star} \in (0, \vartheta_\star)$ such that for every sufficiently large $M \in \mathbb{N}$ with $M \equiv 2 \pmod 3$ the following holds.*

Given Setup 2.4 (with $\mu = \alpha/4$), a reservoir set $\mathcal{R} \subseteq V$ as provided by Lemma 2.13, and a set $X \subseteq V \smallsetminus \mathcal{R}$ with $|X| \leqslant \vartheta_\star|V|$, one can cover all but at most $2\vartheta_\star^2|V|$ vertices of $H - (\mathcal{R} \cup X)$ by disjoint M-vertex paths whose end-pairs are $\zeta_{\star\star}$-connectable.

Proof. This is implicit in [10, Section 7], where an almost spanning path in H is constructed that avoids the absorbing path. More precisely, [10, Lemma 7.1] asserts that for a certain

set X called $V(P_A)$ there, there is a path $Q \subseteq H - X$ satisfying

$$|V(H) \smallsetminus (\mathcal{R} \cup X \cup V(Q))| \leqslant \vartheta_\star^2 |V| \tag{2.9}$$

and two further statements that are immaterial for our present concerns. The only property of X used in the proof of [10, Lemma 7.1] is that it consists of no more than $\vartheta_\star|V|$ vertices and thus we can repeat the entire proof with an arbitrary such set. In the beginning of the proof we fixed a sufficiently large $M \in 3\mathbb{N} + 2$ and below we will assume, in particular, that $M \geqslant \vartheta_\star^{-2}$.

Next we recall that Q is constructed so as to contain many subpaths belonging to the set

$$\mathscr{P} = \big\{P \subseteq H - (X \cup \mathcal{R})\colon P \text{ is an } M\text{-vertex path whose end-pairs are } \zeta_{\star\star}\text{-connectable}\big\}\,.$$

In fact, there is a set $\mathscr{C} \subseteq \mathscr{P}$ of mutually vertex-disjoint paths such that Q starts and ends with a path from $\mathscr{P}$ and between any two "consecutive" members of $\mathscr{C}$ appearing in Q there is either at most one vertex or there are only vertices from $\mathcal{R}$ (cf. clauses (b) and (c) in the definition of candidates in the proof of Lemma 7.1 in [10]). This property of Q guarantees

$$\Big|V(Q) \smallsetminus \big(\bigcup\nolimits_{P\in\mathscr{C}} V(P) \cup \mathcal{R}\big)\Big| \leqslant \frac{|V|}{M} \leqslant \vartheta_\star^2|V|\,,$$

which combined with (2.9) yields

$$\begin{aligned}\Big|V(H) \smallsetminus \Big(\mathcal{R} \cup X \cup \bigcup\nolimits_{P\in\mathscr{C}} V(P)\Big)\Big| &\leqslant \big|V(H) \smallsetminus (\mathcal{R} \cup X \cup V(Q))\big| \\ &\quad + \Big|V(Q) \smallsetminus \Big(\bigcup\nolimits_{P\in\mathscr{C}} V(P) \cup \mathcal{R}\Big)\Big| \leqslant 2\vartheta_\star^2|V|\,.\end{aligned}$$

In other words, $\mathscr{C}$ is the desired collection of paths. □

Proof of Proposition 2.12. Given $\alpha, \xi \in (0, 1/3)$ we apply Lemma 2.14 with α and $\vartheta_\star \ll \xi, \alpha$ and obtain $\zeta_{\star\star} \in (0, \vartheta_\star)$. With this value of $\zeta_{\star\star}$ we appeal to Lemma 2.13, thus getting some $\vartheta_{\star\star} > 0$. Next we pick some $M \gg \vartheta_\star^{-1}, \vartheta_{\star\star}^{-1}$ with $M \equiv 2 \pmod 3$ which is so large that the conclusion of Lemma 2.14 holds. Finally we take $n_0 \gg M, \ell, \vartheta_\star^{-1}, \vartheta_{\star\star}^{-1}$ so large that we can apply the Lemmata 2.13 and 2.14 when $|V| \geqslant n_0$.

We shall prove that the infinite arithmetic progression

$$P = \big\{M' \in \mathbb{N}\colon M' > n_0 \text{ and } M' \equiv 9\ell + 15 \pmod{M + 1 + 3\ell}\big\}$$

has the desired property. Since $9\ell + 15$ and $M + 1 + 3\ell$ are divisible by 3, so are all members of P. Now let Setup 2.4, a collection $\mathscr{B} \subseteq V^3$ of ξ-bridges with $|\mathscr{B}| \geqslant \xi|V|^3$ as well as a natural number $M' \in P$ be given. We are to cover all but at most $\xi|V| + M'$ vertices of H by vertex-disjoint paths consisting of M' vertices which start and end with a ξ-bridge from $\mathscr{B}$. If $|V| \leqslant M'$ we can just take the empty collection of paths, so we may assume $|V| > M' > n_0$ from now on. Let $\mathcal{R} \subseteq V$ be a reservoir set as obtained from Lemma 2.13.

Consider a maximal sequence $b_1, \ldots, b_r$ of ξ-bridges from $\mathscr{B}$ such that $\mathcal{R}$ and these bridges are mutually vertex-disjoint. Since the reservoir and the selected bridges together involve $|\mathcal{R}| + 3r$ vertices, we have $3(|\mathcal{R}| + 3r)|V|^2 \geqslant |\mathscr{B}| \geqslant \xi|V|^3$, whence

$$r \geqslant \frac{\xi|V| - 3|\mathcal{R}|}{9} \geqslant \frac{(\xi - 3\vartheta_\star^2)|V|}{9} > \vartheta_\star|V|\,.$$

In particular, we can choose $x = \lfloor \vartheta_\star|V|/3 \rfloor$ bridges in $\mathscr{B}$ that are vertex-disjoint both from each other and from the reservoir. Define $X \subseteq V$ to be the set of the $3x$ vertices occurring in such a list of ξ-bridges.

By Lemma 2.14 there is a collection $\mathscr{C}$ of disjoint M-vertex paths in $H - (X \cup \mathcal{R})$ covering all but at most $2\vartheta_\star^2|V|$ vertices of $V(H) \smallsetminus (X \cup \mathcal{R})$ which start and end with $\zeta_{\star\star}$-connectable pairs. Due to $M' > n_0 \gg M, \ell$ the natural number k defined by

$$M' = (M + 1 + 3\ell)k + (9\ell + 15)$$

satisfies $k \geqslant \sqrt{n_0}$. Take an arbitrary partition

$$\mathscr{C} = \mathscr{C}_1 \cup \ldots \cup \mathscr{C}_\lambda \cup \mathscr{C}_{\lambda+1}$$

such that $|\mathscr{C}_1| = \ldots = |\mathscr{C}_\lambda| = k > |\mathscr{C}_{\lambda+1}|$. For every $j \in [\lambda]$, we want to connect the k paths in $\mathscr{C}_j$ by means of $k-1$ connections through the reservoir to a path P_j. For each of these connections, we want to use $3\ell + 1$ vertices from $\mathcal{R}$, so we will have

$$v(P_j) = kM + (k-1)(3\ell + 1) = M' - (12\ell + 16)$$

for every $j \in [\lambda]$. Altogether, these connections require at most

$$(3\ell + 1)|\mathscr{C}| \leqslant (3\ell + 1)\frac{|V|}{M} \leqslant \frac{\vartheta_{\star\star}}{2}|\mathcal{R}|$$

vertices from the reservoir, so there is no problem in choosing them one by one.

Our strategy to continue is that for every $j \in [\lambda]$ we want to connect the ends of the path P_j to two of the ξ-bridges that have been put aside into the set X. These connections are to be made through the reservoir and for one of them we want to use $3\ell + 1$ inner vertices, while the other one is supposed to use $\ell_3 = 9\ell + 9$ inner vertices. Thereby each path P_j gets extended to a path Q_j with

$$v(Q_j) = v(P_j) + (9\ell + 9) + (3\ell + 1) + 6 = M'\,.$$

There are indeed sufficiently many bridges contributing to X for this plan, because

$$2\lambda \leqslant \frac{2|V|}{k} \leqslant \frac{2|V|}{\sqrt{n_0}} \leqslant \frac{\vartheta_\star|V|}{4} < x\,.$$

In fact, we even have

$$(12\ell+10)\lambda \leqslant \frac{(12\ell+10)|V|}{k} \leqslant \frac{|V|}{\sqrt[3]{n_0}} \leqslant \frac{\vartheta_{\star\star}|\mathcal{R}|}{2}\,,$$

which shows that the reservoir stays sufficiently intact while we are constructing the paths $Q_1,\dots,Q_\lambda$. Finally, the number of vertices that these paths fail to cover is at most

$$\begin{aligned}\Big|V \smallsetminus \bigcup\nolimits_{P\in\mathscr{C}} V(P)\Big| + \Big|\bigcup\nolimits_{P\in\mathscr{C}_{\lambda+1}} V(P)\Big| &\leqslant |\mathcal{R}| + |X| + 2\vartheta_\star^2|V| + M' \\ &\leqslant (3\vartheta_\star^2+\vartheta_\star)|V| + M' \leqslant \xi|V| + M'\,. \qquad \square\end{aligned}$$

§3. Connecting lemma

In this section we establish appropriate extensions of Proposition 2.6 and Corollary 2.11 for 4-uniform hypergraphs (see Proposition 3.3 and Corollary 3.5 below). In particular, from now on H is a 4-uniform hypergraph.

3.1. **Connectable triples in 4-uniform hypergraphs.** Given a 4-uniform hypergraph $H=(V,E)$ with minimum pair degree $\delta_2(H)\geqslant(5/9+\alpha)|V|^2/2$ we observe that the link H_{uv} of a pair of vertices u, $v\in V$ is a graph with edge density at least $5/9+\alpha$. Consequently, Proposition 2.2 provides the existence of a robust subgraph in every joint link and we collect this information in the following setup.

Setup 3.1. *Suppose that $\alpha\in(0,1/3)$, $\beta>0$, that $\ell\geqslant 3$ is an odd integer, that $H=(V,E)$ is a sufficiently large 4-uniform hypergraph with $|V|=n$ and $\delta_2(H)\geqslant(5/9+\alpha)n^2/2$, and that for every $\{u,v\}\in V^{(2)}$ we have fixed a (β,ℓ)-robust subgraph $R_{uv}\subseteq H_{uv}$ of its link graph given by Proposition 2.2 applied with $\mu=\alpha^3/18$.*

Let us remark that in this situation the vertices u and v are isolated in H_{uv}, for which reason they cannot belong to the robust subgraph R_{uv}. Similarly, the vertex v is isolated in the (3-uniform) link hypergraph H_v. So to make the results of §2.3 applicable it turns out to be more convenient to work with the 3-uniform hypergraph

$$\overline{H}_v = H_v - v$$

obtained from H_v by removing the vertex v. Clearly this hypergraph has $n-1$ vertices and it satisfies the minimum degree condition $\delta_1(\overline{H}_v)\geqslant(5/9+\alpha)n^2/2\geqslant(5/9+\alpha)|V(\overline{H}_v)|^2/2$.

Moreover, $\overline{H}_v$ together with the family of graphs

$$\big\{R_{uv}\colon u\in V(\overline{H}_v)\big\}$$

exemplifies Setup 2.4. Thus, whenever Setup 3.1, a constant $\zeta>0$, and a vertex $v\in V$ are given, we can speak of ζ-connectable pairs in $\overline{H}_v$ and the notion of a ζ-bridge in $\overline{H}_v$ is defined as well.

We continue with the definition of connectable triples in 4-uniform hypergraphs, which pivots on bridges in the 3-uniform links of vertices.

Definition 3.2. *Given Setup 3.1 and $\zeta > 0$, a triple $(x, y, z) \in V^3$ is said to be ζ-connectable in H if the set*

$$U_{xyz} = \{v \in V \colon (x, y, z) \text{ is a } \zeta\text{-bridge in } \overline{H}_v\}$$

satisfies $|U_{xyz}| \geqslant \zeta|V|$.

In general, changing the ordering of x, y, and z can affect whether a triple (x, y, z) is ζ-connectable. It is easy to see, however, that reversing the ordering cannot have such an effect, i.e., (z, y, x) is ζ-connectable if and only if (x, y, z) is.

Proposition 3.3 (Connecting lemma)**.** *Given Setup 3.1 and $\zeta > 0$, there is $\vartheta > 0$ such that if (a, b, c) and (x, y, z) are disjoint, ζ-connectable triples in H, then the number of abc-xyz-paths in H with $8\ell + 10$ inner vertices is at least $\vartheta n^{8\ell+10}$.*

Proof of Proposition 3.3. By monotonicity we may suppose that $\zeta < \frac{1}{48}$. Let ϑ_3 denote the constant obtained by applying Proposition 2.6 to α, β, ℓ, and ζ^3. We shall prove that

$$\vartheta = \frac{1}{2}\zeta^{3\ell+6}\vartheta_3^{2\ell+4} \tag{3.1}$$

has the desired property. To this end we fix two disjoint ζ-connectable triples (a, b, c) and (x, y, z). Consider the set T of all sequences

$$(u, \vec{p}, \vec{q}, \vec{r}, w) \in V^{6\ell+8}$$

with

$$\vec{p} = (p_1, \ldots, p_{3\ell+1}), \quad \vec{q} = (q_1, q_2, q_3, q_4), \quad \text{and} \quad \vec{r} = (r_{3\ell+1}, \ldots, r_1)$$

such that the following six conditions hold:

(1) $u \neq w$ and $u \in U_{abc}$, $w \in U_{xyz}$,
(2) $\vec{q}$ spans a walk of length 3 in the robust subgraph R_{uw} of the link graph H_{uw},
(3) q_1q_2 is ζ^3-connectable in $\overline{H}_u$,
(4) q_3q_4 is ζ^3-connectable in $\overline{H}_w$,
(5) $(b, c, \vec{p}, q_1, q_2)$ spans a 3-uniform path of length $3\ell + 1$ in the link $\overline{H}_u$,
(6) $(q_3, q_4, \vec{r}, x, y)$ spans a 3-uniform path of length $3\ell + 1$ in the link $\overline{H}_w$.

We establish the following lower bound on the size of set T defined above.

Claim 3.4. *We have $|T| \geqslant \zeta^3\vartheta_3^2 n^{6\ell+8}$.*

Proof. Our first step is to show that the set

$$S = \{(u, \vec{q}, w) \in V^6 \colon u \neq w, u \in U_{abc}, w \in U_{xyz}, \text{ and } \vec{q} \text{ spans a walk of length 3 in } R_{uw}\}$$

of all sextuples satisfying (*1*) and (*2*) satisfies

$$|S| \geqslant \tfrac{1}{12}\zeta^2 n^6 \,. \tag{3.2}$$

In fact, in view of Definition 3.2 the ζ-connectability of (a,b,c) and (x,y,z) ensures that there are $\zeta n \cdot (\zeta n - 1)$ possibilities to choose the pair (u,w). Thus for the proof of (3.2) it suffices to show that for every pair $(u,w) \in U_{abc} \times U_{xyz}$ the number of 3-edge walks in R_{uw} is at least cn^4 for some $c > 1/12$. A result of Blakley and Roy [1] (asserting the validity of Sidorenko's conjecture for paths) combined with Proposition 2.2 (*iii*) entails that the number of these walks is indeed at least

$$\frac{(2e(R_{uv}))^3}{v(R_{uv})^2} \geqslant \frac{(4n^2/9)^3}{n^2} = \frac{4^3}{9^3}n^4 > \frac{n^4}{12} \,.$$

Thereby (3.2) is proved and we proceed by estimating the set

$$S^\star = \{(u,\vec{q},w) \in S \colon q_1q_2 \text{ is } \zeta^3\text{-connectable in } \overline{H}_u \text{ and } q_3q_4 \text{ is } \zeta^3\text{-connectable in } \overline{H}_w\}$$

of all sextuples satisfying (*1*)–(*4*). By two successive applications of Lemma 2.7 we shall show

$$|S \smallsetminus S^\star| \leqslant 2\zeta^3 n^6 \,. \tag{3.3}$$

Indeed, for every fixed triple $(u,q_3,q_4) \in V^3$, Lemma 2.7 applied to $\overline{H}_u$ and ζ^3 (in place of H and ζ) tells us that there are at most $\zeta^3 n^3$ triples (q_1,q_2,w) with $q_1q_2 \in E(R_{uw})$ for which q_1q_2 fails to be ζ^3-connectable in $\overline{H}_u$. Similarly, for every fixed triple $(q_1,q_2,w) \in V^3$, Lemma 2.7 applied to $\overline{H}_w$ and ζ^3 tells us that there are at most $\zeta^3 n^3$ triples (u,q_3,q_4) with $q_3q_4 \in E(R_{uw})$ for which q_3q_4 fails to be ζ^3-connectable in $\overline{H}_w$. So altogether we have $|S \smallsetminus S^\star| \leqslant 2n^3 \cdot \zeta^3 n^3$, which proves (3.3).

As a direct consequence of (3.2), (3.3), and $\zeta < \frac{1}{48}$ we obtain

$$|S^\star| \geqslant \frac{1}{12}\zeta^2 n^6 - 2\zeta^3 n^6 \geqslant 2\zeta^3 n^6 \,. \tag{3.4}$$

Now by Proposition 2.6 and the definition of $S^\star$, for every sextuple $(u,\vec{q},w)$ there are at least $\vartheta_3(n-1)^{3\ell+1}$ sequences $\vec{p}$ as demanded by (*5*) and there is at least the same number of sequences $\vec{r}$ as required by (*6*). Consequently, we have

$$|T| \geqslant |S^\star| \left(\vartheta_3(n-1)^{3\ell+1}\right)^2 \overset{(3.4)}{\geqslant} \zeta^3 \vartheta_3^2 n^{6\ell+8}$$

for sufficiently large n and this concludes the proof of Claim 3.4. □

Now consider an auxiliary 3-partite 3-uniform hypergraph A with vertex classes M, U, and W, where $M = V^{6\ell+6}$, while U and W are two copies of V. We represent the vertices in M as sequences

$$\vec{m} = (p_1,\ldots,p_{3\ell+1},q_1,q_2,q_3,q_4,r_{3\ell+1},\ldots,r_1) = (\vec{p},\vec{q},\vec{r}\,) \,.$$

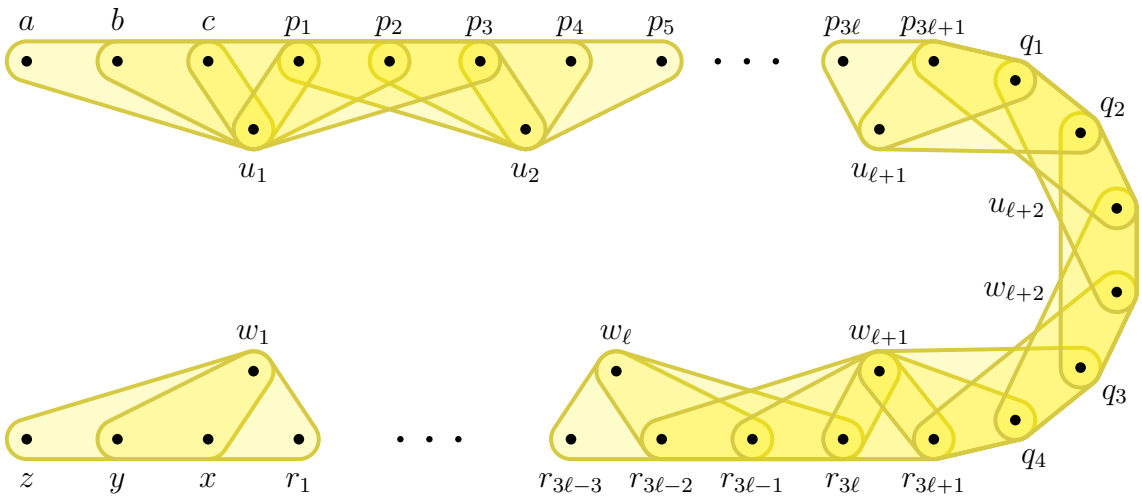

FIGURE 3.1. Connecting (a, b, c) and (x, y, z).

The edges of A are defined to be the triples $\{u, \overline{m}, w\}$ with $\overline{m} \in M$, $u \in U$, $w \in W$, and $(u, \overline{m}, w) \in T$. Thus Claim 3.4 implies

$$e(A) = |T| \geqslant \zeta^3 \vartheta_3^2 n^{6\ell+8} = \zeta^3 \vartheta_3^2 |M||U||W| \,. \tag{3.5}$$

For every vertex $\overline{m} \in M$ we consider its (ordered) bipartite link graph

$$A_{\overline{m}} = \{(u, w) \in U \times W : \overline{m}uw \in E(A)\} \,.$$

A standard convexity argument yields

$$\sum_{\overline{m} \in M} |A_{\overline{m}}|^{\ell+2} \geqslant |M| \left(\frac{e(A)}{|M|} \right)^{\ell+2} \overset{(3.5)}{\geqslant} \zeta^{3\ell+6} \vartheta_3^{2\ell+4} n^{8\ell+10} \overset{(3.1)}{=} 2\vartheta n^{8\ell+10} \,. \tag{3.6}$$

As we will check below, if $\overline{m} \in M$ and $(u_1, w_1), \ldots, (u_{\ell+2}, w_{\ell+2}) \in A_{\overline{m}}$, then

$$abcu_1p_1p_2p_3u_2 \ldots u_{\ell+1}p_{3\ell+1}q_1q_2u_{\ell+2}w_{\ell+2}q_3q_4r_{3\ell+1}w_{\ell+1}r_{3\ell}r_{3\ell-1}r_{3\ell-2}w_\ell \ldots w_1xyz$$

is an abc-xyz-walk in H with $8\ell + 10$ inner vertices (see Figure 3.1). By (3.6) this argument produces at least $2\vartheta n^{8\ell+10}$ such walks and, as at most $O(n^{8\ell+9})$ of them can fail to be paths, this will conclude the proof of Proposition 3.3.

It remains to verify that any four consecutive vertices in the above sequence form an edge of H. Recall that $(u_i, \overline{m}, w_i) \in T$ for every $i \in [\ell + 2]$. So *(1)* implies $abcu_1 \in E$ and $w_1xyz \in E$, respectively. Since $bcp_1 \ldots p_{3\ell+1}q_1q_2$ is a 3-uniform path in each of the link hypergraphs $\overline{H}_{u_1}, \ldots, \overline{H}_{u_{\ell+2}}$ by *(5)*, we have

$$bcu_1p_1,\ cu_1p_1p_2,\ u_1p_1p_2p_3,\ p_1p_2p_3u_2,\ \ldots,\ p_{3\ell+1}q_1q_2u_{\ell+2} \in E$$

and a similar argument utilising (6) establishes

$$w_{\ell+2}q_3q_4r_{3\ell+1},\ q_3q_4r_{3\ell+1}w_{\ell+1},\ldots,\ r_1w_1xy \in E\,.$$

It remains to note, that by (2) we have

$$q_1q_2u_{\ell+2}w_{\ell+2},\ q_2u_{\ell+2}w_{\ell+2}q_3,\ u_{\ell+2}w_{\ell+2}q_3q_4 \in E\,,$$

which completes the proof of Proposition 3.3. □

3.2. **Other residue classes.** The almost spanning cycle to be constructed in Section 7 will be obtained from an almost spanning path cover with the help of the connecting lemma. The number of inner vertices appearing in the last connection will determine in which residue class modulo four the number of left-over vertices will lie. As the nature of our absorbing mechanism requires that the number of left-over vertices should be divisible by four, it will be useful to strengthen the connecting lemma as follows.

Corollary 3.5. *Given Setup 3.1 and $\zeta > 0$, there exist natural numbers $\ell_1, \ell_2, \ell_3, \ell_4 \leqslant 50\ell$ with $\ell_i \equiv i \pmod 4$ for all $i \in [4]$ and $\vartheta = \vartheta(\alpha, \beta, \ell, \zeta) > 0$ such that the following holds.*

If (a, b, c), (x, y, z) are disjoint ζ-connectable triples of vertices of H, then for every $i \in [4]$ the number of abc-xyz-paths in H with ℓ_i inner vertices is at least $\vartheta|V|^{\ell_i}$.

The proof will be established in almost the same way as Corollary 2.11, the main difference being that, instead of bridges, we utilise connectable triples to build connecting paths whose number of inner vertices is incongruent to 2 modulo 4 (cf. Proposition 3.3). For the proof we first observe that there are many connectable triples in the 4-uniform hypergraph $H = (V, E)$ under consideration.

Lemma 3.6. *Given Setup 3.1 and $\zeta \in (0, \alpha/4)$, the number of ζ-connectable triples in H is at least $(1/3 - 2\zeta)|V|^3$.*

Proof. Let N be the number of ζ-connectable triples in $H = (V, E)$. We will estimate the number

$$\Pi = \big|\{(v, e) \colon e \text{ is a } \zeta\text{-bridge in } \overline{H}_v\}\big|\,.$$

in two different ways. First, Lemma 2.9 tells us that for every vertex $v \in V$ there are at least $(n-1)^3/3$ different ζ-bridges in $\overline{H}_v$, which yields $\Pi \geqslant n(n-1)^3/3 \geqslant (1/3 - \zeta)n^4$ for sufficiently large n. Second, we have

$$\Pi \leqslant N \cdot n + n^3 \cdot \zeta n\,,$$

since every ζ-connectable triple e participates in at most n pairs $(v, e) \in \Pi$, while every triple e that fails to be ζ-connectable can be a ζ-bridge in at most ζn link hypergraphs.

By comparing our estimates on Π we obtain

$$N \geqslant (1/3 - \zeta)n^3 - \zeta n^3 = (1/3 - 2\zeta)n^3 \,,$$

as promised. □

Proof of Corollary 3.5. By monotonicity we may suppose that $\zeta < \alpha/4 < 1/12$ and let $\vartheta_1 > 0$ be given by Proposition 3.3. We set

$$\ell_1 = 32\ell + 49 \,, \quad \ell_2 = 8\ell + 10 \,, \quad \ell_3 = 16\ell + 23 \,, \quad \ell_4 = 24\ell + 36 \,, \quad \text{and} \quad \vartheta = \frac{\vartheta_1^4}{7^3} \,,$$

It follows from $\ell \geqslant 3$ that $\ell_2 \leqslant \ell_3 \leqslant \ell_4 \leqslant \ell_1 \leqslant 50\ell$ and Proposition 3.3 directly asserts the conclusion of Corollary 3.5 for $i = 2$.

For $i = 3$ we use the following argument. Given disjoint ζ-connectable triples (a, b, c) and (x, y, z) Lemma 3.6 delivers for sufficiently large n at least $n^3/6$ different ζ-connectable triples (u, v, w) in H with $\{a, b, c, x, y, z\} \cap \{u, v, w\} = \varnothing$. For each of them, Proposition 3.3 provides $\vartheta_1 n^{\ell_2}$ abc-uvw-paths of the form $abcPuvw$, where P consists of ℓ_2 vertices. Similarly, there are $\vartheta_1 n^{\ell_2}$ uvw-xyz-paths of the form $uvwQxyz$, where Q consists of ℓ_2 vertices as well. Altogether, this yields $\vartheta_1^2 n^{\ell_3}/6$ abc-xyz-walks of the form $abcPuvwQxyz$ Since at most $O(n^{\ell_3 - 1})$ of them fail to be a path due to some overlap between P and Q, the corollary follows for $i = 3$.

For $i = 0$ and $i = 1$ we argue similarly, exploiting $\ell_4 = \ell_2 + \ell_3 + 3$ and $\ell_1 = \ell_3 + \ell_3 + 3$, respectively. □

3.3. **Bridges in 4-uniform hypergraphs.** We conclude this section with some results that will be helpful in Section 5. The following is a 4-uniform analogue of Lemma 2.7.

Lemma 3.7. *Given Setup 3.1 and $\zeta > 0$, there are at most $\zeta|V|^4$ quadruples $(a, b, c, d) \in V^4$ such that (a, b, c) is a ζ-bridge in $\overline{H}_d$, but (a, b, c) is not ζ-connectable in H.*

Proof. It follows from Definition 3.2 that for every triple $(a, b, c) \in V^3$ that fails to be ζ-connectable in H, there are at most $\zeta|V|$ choices of d such that (a, b, c) is a ζ-bridge in $\overline{H}_d$. Consequently, there are at most $\zeta|V|^4$ quadruples with the properties under consideration. □

Similarly to the notion of bridges in 3-uniform hypergraphs, which was defined by containing connectable pairs (cf. Definition 2.8), we define 4-uniform bridges in terms of connectable triples.

Definition 3.8. *Given Setup 3.1 and $\zeta > 0$, a quadruple $(a, b, c, d) \in V^4$ is called a ζ-bridge in H if $abcd \in E$ and (a, b, c) and (b, c, d) are both ζ-connectable triples in H.*

It will later become important for us that there are plenty of bridges in H. The argument in the proof of the following lemma is very similar to that in the proof of Lemma 2.9.

Lemma 3.9. *Given Setup 3.1 and $\zeta > 0$ there are at least $(1/9 - 7\zeta)|V|^4$ ζ-bridges in H.*

Proof. Let $A = \{(a,b,c,d) \in V^4 \colon abcd \in E\}$ be the set of all orderings of the edges of H. Obviously, the minimum pair degree condition imposed on H implies

$$|A| \geqslant \left(\frac{5}{9} + \alpha\right)|V|^3(|V|-1) \geqslant \left(\frac{5}{9} + \alpha - \zeta\right)|V|^4 .$$

We consider two exceptional subsets of A, namely

$$\begin{aligned} P_1 &= \{(a,b,c,d) \in A \colon (a,b,c) \text{ is not a } \zeta\text{-bridge in } \overline{H}_d\} \\ \text{and} \quad Q_1 &= \{(a,b,c,d) \in A \smallsetminus P_1 \colon (a,b,c) \text{ is not } \zeta\text{-connectable in } H\} . \end{aligned}$$

It follows directly from Lemma 3.7, that

$$|Q_1| \leqslant \zeta |V|^4 .$$

Moreover, by Lemma 2.9 every $d \in V$ contributes at most $(2/9 + \alpha/2 + 2\zeta)(|V|-1)^3$ quadruples to P_1, which yields the upper bound

$$|P_1| \leqslant \left(\frac{2}{9} + \frac{\alpha}{2} + 2\zeta\right)|V|^4 .$$

By symmetry we obtain the same bounds for the sets

$$\begin{aligned} P_2 &= \{(a,b,c,d) \in A \colon (b,c,d) \text{ is not a } \zeta\text{-bridge in } \overline{H}_a\} \\ \text{and} \quad Q_2 &= \{(a,b,c,d) \in A \smallsetminus P_2 \colon (b,c,d) \text{ is not } \zeta\text{-connectable in } H\} . \end{aligned}$$

Since every quadruple in $A \smallsetminus (P_1 \cup Q_1 \cup P_2 \cup Q_2)$ is a ζ-bridge in H, the lemma follows. □

§4. Reservoir lemma

The connecting lemma for 4-uniform hypergraphs from Section 3 allows us to connect paths that start and end with a connectable triple. However, in the process of building longer paths, we must not interfere with the paths already constructed. For that we put aside a randomly selected small *reservoir* of vertices $\mathcal{R}$. Moreover, due to the divisibility restriction of the absorbing path lemma (see Proposition 5.1), we need to guarantee short connections by paths of lengths in all residue classes modulo four. The existence of such a reservoir set is given by the following proposition.

Proposition 4.1 (Reservoir lemma)**.** *Given Setup 3.1 and constants $\zeta_\star$, $\zeta_{\star\star} > 0$, let integers $\ell_1, \ell_2, \ell_3, \ell_4 \leqslant 50\ell$ and $\vartheta_\star = \vartheta(\alpha, \beta, \ell, \zeta_\star)$ and $\vartheta_{\star\star} = \vartheta(\alpha, \beta, \ell, \zeta_{\star\star})$ be provided by Corollary 3.5. Then there exists a subset $\mathcal{R} \subseteq V$ such that*

(i) $\vartheta_\star^2|V|/2 \leqslant |\mathcal{R}| \leqslant \vartheta_\star^2|V|$

(ii) and for all disjoint, $\zeta_{\star\star}$-connectable triples (a, b, c), (x, y, z) in H and every $i \in [4]$, there are $\vartheta_{\star\star}|\mathcal{R}|^{\ell_i}/2$ abc-xyz-paths with ℓ_i inner vertices, which all belong to $\mathcal{R}$.

We often refer to the set $\mathcal{R}$ given by Proposition 4.1 as the *reservoir set*.

Proof. The existence of such a reservoir set $\mathcal{R}$ is established by a standard probabilistic argument. For that we set

$$p = \frac{3}{4}\vartheta_\star^2 \qquad \text{and} \qquad C = \left(\frac{4}{3}\right)^{\frac{1}{50\ell}}$$

and we consider a random subset $\mathcal{R} \subseteq V$ with elements included independently with probability p. Observe that $|\mathcal{R}|$ is binomially distributed with expectation $p|V|$ and Chebyshev's inequality implies that a.a.s.

$$\frac{p}{C}|V| \leqslant |\mathcal{R}| \leqslant Cp|V|\,. \tag{4.1}$$

In particular, our choice of C shows that a.a.s. the set $\mathcal{R}$ satisfies part *(i)* of Proposition 4.1.

For part *(ii)* we recall that for every pair of disjoint, $\zeta_{\star\star}$-connectable triples (a, b, c), $(x, y, z) \in V^3$, Corollary 3.5 guarantees for every $i \in [4]$ at least $\vartheta_{\star\star}|V|^{\ell_i}$ *abc-xyz*-paths with ℓ_i inner vertices. Let $X = X(i, (a, b, c), (x, y, z))$ be the random variable counting the number of such *abc-xyz*-paths with all ℓ_i inner vertices in $\mathcal{R}$. Clearly,

$$\mathbb{E}X \geqslant p^{\ell_i} \cdot \vartheta_{\star\star}|V|^{\ell_i}\,. \tag{4.2}$$

Since including or not including a particular vertex into $\mathcal{R}$ affects the random variable X by no more than $\ell_i|V|^{\ell_i-1}$, the Azuma–Hoeffding inequality (see, e.g., [6, Corollary 2.27]) asserts

$$\begin{aligned}\mathbb{P}\big(X \leqslant \tfrac{2}{3}\vartheta_{\star\star}(p|V|)^{\ell_i}\big) &\overset{(4.2)}{\leqslant} \mathbb{P}\big(X \leqslant \tfrac{2}{3}\mathbb{E}X\big)\\ &\leqslant \exp\left(-\frac{(\mathbb{E}X)^2}{18 \cdot |V| \cdot (\ell_i|V|^{\ell_i-1})^2}\right) = \exp\big(-\Omega(|V|)\big)\,.\end{aligned} \tag{4.3}$$

In view of (4.1) and $\ell_i \leqslant 50\ell$ our choice of C implies that a.a.s.

$$\frac{2}{3}\vartheta_{\star\star}(p|V|)^{\ell_i} \geqslant \frac{1}{2}\vartheta_{\star\star}|\mathcal{R}|^{\ell_i}. \tag{4.4}$$

Since there are at most $4|V|^6$ choices for the triples (a, b, c), (x, y, z), and for i, the union bound combined with (4.3) and (4.4) shows that a.a.s. the set $\mathcal{R}$ satisfies part *(ii)* of Proposition 4.1. Consequently, a reservoir set $\mathcal{R}$ with all required properties exists. □

In the proof of Theorem 1.3 in Section 7 we will repeatedly connect connectable triples through the reservoir $\mathcal{R}$ provided by Proposition 4.1. Whenever such a connection is made some of the vertices of the reservoir are used and the part of the reservoir that may still be used for further connections shrinks. Although $\Omega(|V|)$ such connections will be needed, we shall be able to keep an appropriate version of property *(ii)* of the reservoir intact throughout this process. We prepare for this situation by the following corollary.

Corollary 4.2. *Given Setup 3.1 and $\zeta_\star$, $\zeta_{\star\star} > 0$, let integers $\ell_1, \ell_2, \ell_3, \ell_4 \leqslant 50\ell$ and $\vartheta_\star = \vartheta(\alpha, \beta, \ell, \zeta_\star)$, $\vartheta_{\star\star} = \vartheta(\alpha, \beta, \ell, \zeta_{\star\star})$ be provided by Corollary 3.5. Moreover, let $\mathcal{R} \subseteq V$ be a reservoir set provided by Proposition 4.1. Then for every subset $\mathcal{R}' \subseteq \mathcal{R}$ of size at most $\frac{\vartheta_\star^2 \vartheta_{\star\star}}{400\ell}|V|$ the following holds.*

For all disjoint, $\zeta_{\star\star}$-connectable triples (a, b, c), (x, y, z) in H and every $i \in [4]$, there is some abc-xyz-path with ℓ_i inner vertices, which all belong to $\mathcal{R} \smallsetminus \mathcal{R}'$.

Proof. It follows from the lower bound in Proposition 4.1 *(i)* and the bound on $|\mathcal{R}'|$ that

$$|\mathcal{R}'| \leqslant \frac{\vartheta_{\star\star}}{200\ell}|\mathcal{R}|\,.$$

Moreover, every vertex in $\mathcal{R}'$ is an inner vertex in at most $\ell_i|\mathcal{R}|^{\ell_i - 1}$ different *abc-xyz*-paths in H with all ℓ_i inner vertices belonging to $\mathcal{R}$. Consequently, it follows from Proposition 4.1 *(ii)* and $\ell_i \leqslant 50\ell$ that there are at least

$$\frac{\vartheta_{\star\star}}{2}|\mathcal{R}|^{\ell_i} - |\mathcal{R}'| \cdot \ell_i|\mathcal{R}|^{\ell_i - 1} \geqslant \frac{\vartheta_{\star\star}}{4}|\mathcal{R}|^{\ell_i}$$

such paths with all inner vertices from $\mathcal{R} \smallsetminus \mathcal{R}'$. □

§5. Absorbing path lemma

5.1. **Outline and main ideas.** In this section we establish the existence of an *absorbing path* P_A, which at the end of the proof of Theorem 1.3 will allow us to 'absorb' an arbitrary (but not too large) set Z of left-over vertices with a size divisible by four.

Proposition 5.1 (Absorbing path lemma)**.** *Given Setup 3.1, there is some $\zeta_0 = \zeta_0(\alpha) > 0$ such that for every $\zeta_\star \in (0, \zeta_0)$ and for $\vartheta_\star = \vartheta(\alpha, \beta, \ell, \zeta_\star)$ provided by Proposition 3.3 the following holds. For every set $\mathcal{R} \subseteq V$ of size at most $\vartheta_\star^2|V|$, there exists a path $P_A \subseteq H - \mathcal{R}$ satisfying*

- *(i)* $|V(P_A)| \leqslant \vartheta_\star|V|$,
- *(ii) the end-triples of P_A are $\zeta_\star$-connectable,*
- *(iii) and for every subset $Z \subseteq V \smallsetminus V(P_A)$ with $|Z| \leqslant 2\vartheta_\star^2 n$ and $|Z| \equiv 0 \pmod 4$, there exists a path $Q \subseteq H$ with the same end-triples as P_A and $V(Q) = V(P_A) \cup Z$.*

The absorbing path P_A will be built by connecting many so-called *absorbers* (see Definition 5.5). Similarly as in [10], the absorbers used here consist of two parts. Roughly speaking, the first part allows us to "swap" any given vertex a with a different vertex x, which then can be absorbed by the second part of the absorber. In other words, we can move from an arbitrary vertex a, which we may need to absorb, to another vertex x that enjoys better properties. For the first part this can be easily achieved if a and x share a 3-uniform path with six vertices in their joint link $H_a \cap H_x$ (see Figure 5.1). Note that our degree assumption on H implies that the 3-uniform link of every vertex has density at least $5/9 > 1/2$ and, hence, the joint link of any two vertices has positive density and the existence of the 6-vertex paths follows from [3].

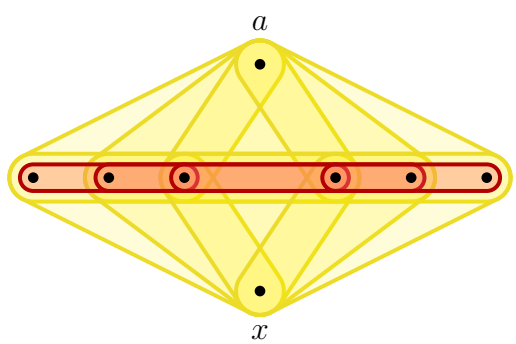

FIGURE 5.1. Both a and x form a 4-uniform path together with the 3-uniform path in $H_a \cap H_x$.

Having replaced x with a we need to ensure that x itself can be absorbed. For that, in the context of 4-uniform hypergraphs, one usually showed that many vertices x have the property that their links contain a 3-uniform path on six vertices with the additional property that its vertices span a 4-uniform path in H. In particular, these six vertices form a path on its own and can absorb x in the middle, building a 7-vertex path with the same end-triples (see e.g. [10], where this strategy was implemented for 3-uniform hypergraphs).

While working on a related problem, the first two authors [8] suggested a different approach for the second part of the absorber. For that we note that every complete 4-partite 4-uniform hypergraph $K^{(4)}_{s,s,s,s}$ contains a path on $4s$ vertices. However, any four consecutive vertices in that path are crossing in the $K^{(4)}_{s,s,s,s}$ and removing them gives rise to a copy of $K^{(4)}_{s-1,s-1,s-1,s-1}$, which again contains a spanning path on the remaining $4(s-1)$ vertices. Moreover, if $s \geqslant 3$ then these paths have the same end-triples. Actually it suffices already to start with a $K^{(4)}_{3,3,3,2}$ and we will follow that route. Again the existence of $K^{(4)}_{3,3,3,2}$'s in 4-uniform hypergraphs of positive density follows from [3]. However, due to the 4-partiteness, with this absorption mechanism we can only absorb four tuples of

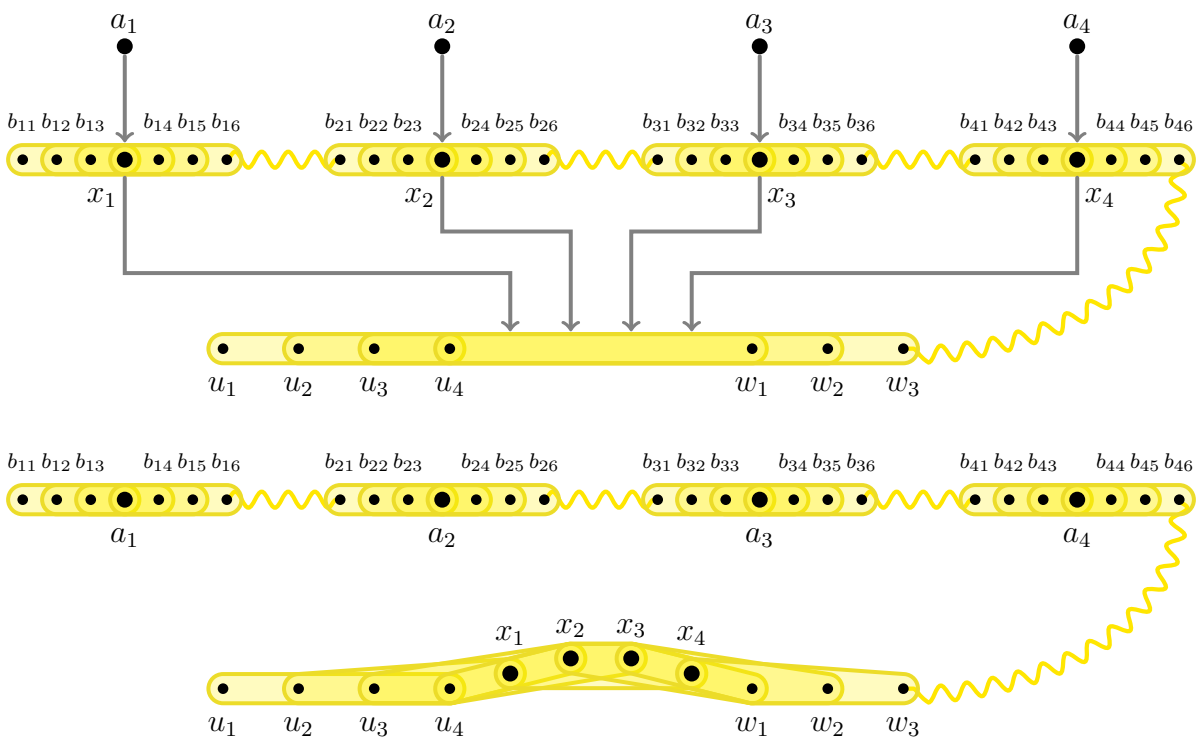

FIGURE 5.2. Absorber for $(a_1, \dots, a_4)$ before and after absorption.

vertices $(x_1, \dots, x_4)$, which in turn implies that we have to start with four vertices $a_1, \dots, a_4$ at the beginning. This is the reason for the divisibility condition on $|Z|$ in part *(iii)* of Proposition 5.1.

As a result for any given $(a_1, \dots, a_4) \in V^4$ our absorbers will consist of 35 vertices, which split into five 7-vertex paths (see Figure 5.2). Four of the paths are of the form $b_{i1}b_{i2}b_{i3}x_ib_{i4}b_{i5}b_{i6}$ for $i \in [4]$, where $b_{i1}b_{i2}b_{i3}b_{i4}b_{i5}b_{i6}$ is a 3-uniform path in the joint link $H_{a_i} \cap H_{x_i}$ (cf. first part of the absorber outlined above). The fifth path $u_1 \dots u_4w_1w_2w_3$ is given by the vertices of a $K^{(4)}_{2,2,2,1}$, which together with $x_1, \dots, x_4$ span a $K^{(4)}_{3,3,3,2}$. In order to connect these paths into one absorbing path P_A, we shall also require that the end-triples of these paths are connectable (see Lemmata 5.3 and 5.4 below).

5.2. **Proof of the absorbing path lemma.** Roughly speaking, the following lemma shows that the joint 3-uniform link $H_a \cap H_x$ of (almost) all pairs of vertices a, $x \in V$ contains $\Omega(|V|^3)$ connectable triples. Consequently, a result of Erdős [3] implies that the joint link contains $\Omega(|V|^6)$ 3-uniform paths on six vertices with connectable end-triples (in fact all triples will be connectable), which shows the abundant existence of the first part of our absorbers for every vertex $a \in V$ (see Lemma 5.3 below).

Lemma 5.2. *Given Setup 3.1 and $\zeta > 0$, there is a set $X \subseteq V$ of size $|X| \leqslant \sqrt{\zeta}n$ such that for all $a \in V$ and every $x \in V \smallsetminus X$ there are at least $(\alpha/3 - \sqrt{\zeta})|V|^3$ triples $(b, b', b'') \in V^3$ with $bb'b'' \in E(H_a) \cap E(H_x)$ and (b, b', b'') being ζ-connectable in H.*

Proof. The lemma is trivially true for $\zeta \geqslant \alpha^2/9$ and, hence, we may assume $\zeta < \alpha^2/9$. First, we define the set X. For a vertex $v \in V$ let

$$\mathcal{B}(v) = \{(b, b', b'') \in V^3 \colon (b, b', b'') \text{ is a } \zeta\text{-bridge in } \overline{H}_v, \text{ but it is not } \zeta\text{-connectable in } H\}$$

and we note that Lemma 3.7 asserts

$$\sum_{v \in V} |\mathcal{B}(v)| \leqslant \zeta n^4 .$$

We define

$$X = \{v \in V \colon |\mathcal{B}(v)| \geqslant \sqrt{\zeta}n^3\} .$$

and $|X| \leqslant \sqrt{\zeta}n$ follows.

It is left to show that $V \smallsetminus X$ has the desired property. For that let $a \in V$ and $x \in V \smallsetminus X$. An application of Lemma 2.10 with $H = \overline{H}_x$ and $H' = \overline{H}_a$ yields for sufficiently large n at least

$$\frac{\alpha}{2}(n-1)^3 > \frac{\alpha}{3}n^3$$

triples $(b, b', b'') \in V^3$ such that

$$bb'b'' \in E(H_a) \cap E(H_x) \quad \text{and} \quad (b, b', b'') \text{ is a } \zeta\text{-bridge in } H_x. \tag{5.1}$$

Since $x \notin X$, we have $|\mathcal{B}(x)| < \sqrt{\zeta}n^3$ and, therefore, all but at most $\sqrt{\zeta}n^3$ of the triples (b, b', b'') satisfying (5.1) are ζ-connectable. □

Lemma 5.2 combined with a result of Erdős from [3] implies the following.

Lemma 5.3. *Given Setup 3.1 and $\zeta \in (0, \alpha^2/36)$, there is some $\xi' = \xi'(\alpha) > 0$ and a set $X \subseteq V$ of size at most $\sqrt{\zeta}n$ such that the following holds.*

For all $a \in V$ and $x \in V \smallsetminus X$, there are at least $\xi' n^6$ sextuples $(b_1, \dots, b_6) \in V^6$ such that

(i) $b_1 b_2 \dots b_6$ is a 3-uniform path in $H_a \cap H_x$

(ii) and (b_1, b_2, b_3), (b_4, b_5, b_6) are ζ-connectable in H.

Proof. Let X be given by Lemma 5.2 and fix two vertices $a \in V$ and $x \in V \smallsetminus X$. We consider the auxiliary 3-partite 3-uniform hypergraph $B = (U \cup U' \cup U'', E_B)$ whose vertex classes are three disjoint copies of V and edges $bb'b'' \in E_B$ with $b \in U$, $b' \in U'$, and $b'' \in U''$ correspond to ζ-connectable triples (b, b', b'') of H with $bb'b'' \in E(H_a) \cap E(H_x)$. Lemma 5.2 and $\zeta < \alpha^2/36$ tell us that $|E_B| \geqslant \alpha n^3/6$ and it follows from [3] that B contains any complete 3-partite 3-uniform hypergraph of fixed size. In particular, there

is a copy of $K^{(3)}_{2,2,2}$ in B and by the so-called supersaturation phenomenon (see, e.g., [4]) there are at least $2\xi' n^6$ such copies for some constant $\xi' = \xi'(\alpha)$. Each such copy of $K^{(3)}_{2,2,2}$ contains a walk $b_1 b_2 \dots b_6$ in $H_a \cap H_x$ satisfying *(ii)* and, consequently, there are at least $2\xi' n^6 - O(n^5) \geqslant \xi' n^6$ paths satisfying *(i)* and *(ii)*. □

Next we focus on the second part of the absorbers.

Lemma 5.4. *There is some $\xi'' > 0$ such that for every $\zeta \in (0, 1/126)$ the following holds. Given Setup 3.1, there are $\xi'' n^{11}$ 11-tuples $(u_1, \dots, u_4, x_1, \dots, x_4, w_1, w_2, w_3) \in V^{11}$ so that*

(i) $u_1 \dots u_4 x_1 \dots x_4 w_1 w_2 w_3$ and $u_1 \dots u_4 w_1 w_2 w_3$ are 4-uniform paths in H
(ii) and (u_1, u_2, u_3), (w_1, w_2, w_3) are ζ-connectable triples in H.

The proof of Lemma 5.4 is very similar to the proof of Lemma 5.3. However, instead of an auxiliary 3-uniform hypergraph of connectable triples in the shared link of two vertices, we shall consider a 4-uniform hypergraph of bridges.

Proof. We consider the 4-partite 4-uniform hypergraph $B = (V_1 \cup V_2 \cup V_3 \cup V_4, E_B)$ whose vertex classes are four disjoint copies of V and whose edges $v_1 v_2 v_3 v_4 \in E_B$ with $v_i \in V_i$ for $i \in [4]$ correspond to ζ-bridges (v_1, v_2, v_3, v_4) of H. By Lemma 3.9 and our choice of ζ, there are at least

$$\Big(\frac{1}{9} - 7\zeta\Big) n^4 > \frac{n^4}{18}$$

ζ-bridges in H and, hence, $|E_B| \geqslant n^4/18$ edges. Similar as in the proof of Lemma 5.3, this implies that there are at least $2\xi'' n^{11}$ copies of the complete 4-partite 4-uniform hypergraph $K^{(4)}_{3,3,3,2}$ in B for some universal constant $\xi'' > 0$. Passing through the vertices of each such copy of $K^{(4)}_{3,3,3,2}$ (by starting in a vertex in V_1 and then passing cyclically through the other vertex classes) leads to a 4-uniform path $u_1 \dots u_4 x_1 \dots x_4 w_1 w_2 w_3$ in B. In particular, $x_1 \dots x_4$ is an edge in B, and owing to the completeness of $K^{(4)}_{3,3,3,2}$ we see that after removing the vertices $x_1, \dots, x_4$, the remaining vertices still form a 4-uniform path $u_1 \dots u_4 w_1 w_2 w_3$ in B.

By definition of B every such path $u_1 \dots u_4 x_1 \dots x_4 w_1 w_2 w_3$ corresponds to a walk in H. Consequently, H contains at least $2\xi'' n^{11} - O(n^{10}) \geqslant \xi'' n^{11}$ 11-tuples $u_1 \dots u_4 x_1 \dots x_4 w_1 w_2 w_3$ that satisfy part *(i)* of Lemma 5.4. Moreover, recalling that edges of B correspond to ζ-bridges in H it follows that (u_1, u_2, u_3), (w_1, w_2, w_3) are ζ-connectable in H for every such 11-tuple, i.e., part *(ii)* holds as well. □

Next we define the *absorbers*, which will be the building blocks of the absorbing path P_A in Proposition 5.1.

Definition 5.5. *Given Setup 3.1, $\zeta > 0$, and $\vec{a} = (a_1, \dots, a_4) \in V^4$, we say that a tuple $(\vec{b}_1, \dots, \vec{b}_4, \vec{u}, \vec{x}, \vec{w}) \in V^{35}$ with*

$$\vec{b}_i = (b_{i1}, \dots, b_{i6}) \text{ for } i \in [4]\,,\ \vec{u} = (u_1, \dots, u_4)\,,\ \vec{x} = (x_1, \dots, x_4)\,, \quad \text{and} \quad \vec{w} = (w_1, w_2, w_3)\,,$$

is an $\vec{a}$-absorber in H, if

(*a*) *all its 35 vertices are distinct and different from those in $\vec{a}$,*
(*b*) *$\vec{b}_i$ satisfies properties (i) and (ii) of Lemma 5.3 for a_i and x_i for every $i \in [4]$,*
(*c*) *and $(\vec{u}, \vec{x}, \vec{w})$ satisfies properties (i) and (ii) of Lemma 5.4.*

Formally, an $\vec{a}$-absorber is defined to be a septuple. However, since it consists of 35 vertices we may refer to it sometimes as a 35-tuple from V^{35}. Similarly, in part (*c*) we refer to $(\vec{u}, \vec{x}, \vec{w})$ as an 11-tuple.

We note that if $\vec{a} = (a_1, \dots, a_4)$ consists of four distinct vertices, then an $\vec{a}$-absorber can be used to absorb the set $\{a_1, \dots, a_4\}$ as follows (see Figure 5.2). The 35 vertices of an $\vec{a}$-absorber $(\vec{b}_1, \dots, \vec{b}_4, \vec{u}, \vec{x}, \vec{w})$ can be partitioned into five 4-uniform paths

$$b_{i1}b_{i2}b_{i3}x_ib_{i4}b_{i5}b_{i6} \ \text{ for } i \in [4] \quad \text{and} \quad u_1 \dots u_4w_1w_2w_3\,,$$

in H, each of which starts and ends with a ζ-connectable triple. If all five of these paths are segments (not necessarily consecutive) of the absorbing path P_A, while all a_1, a_2, a_3, a_4 are not on P_A, then one can replace these five paths by

$$b_{i1}b_{i2}b_{i3}a_ib_{i4}b_{i5}b_{i6} \ \text{ for } i \in [4] \quad \text{and} \quad u_1 \dots u_4x_1 \dots x_4w_1w_2w_3\,,$$

i.e., replace x_i with a_i in the four "b-paths" and include $x_1, \dots, x_4$ in the middle of the fifth path.

Below we easily deduce from Lemmata 5.3 and 5.4 that there are $\Omega(n^{35})$ absorbers for every fixed 4-tuple $\vec{a} \in V^4$. This fact will play a key rôle in the proof of the absorbing path lemma.

Lemma 5.6. *Given Setup 3.1, there are constants $\zeta_0' = \zeta_0'(\alpha)$ and $\xi = \xi(\alpha) > 0$ such that for every $\zeta \in (0, \zeta_0')$ and for every $\vec{a} \in V^4$ the number of $\vec{a}$-absorbers in H is at least ξn^{35}.*

Proof. For a fixed $\alpha \in (0, 1/3)$ let $\xi'(\alpha) > 0$ and $\xi'' > 0$ be provided by Lemmata 5.3 and 5.4. We set

$$\zeta_0' = \min\left\{\left(\frac{\xi''}{23}\right)^2, \frac{\alpha^2}{126}\right\} \qquad \text{and} \qquad \xi = \frac{1}{4}(\xi')^4\xi''$$

and let $\zeta \in (0, \zeta_0')$ and $\vec{a} = (a_1, \dots, a_4) \in V^4$ be given. Moreover, let $X \subseteq V$ be the exceptional set of vertices of size at most $\sqrt{\zeta}n$ given by Lemma 5.3.

Lemma 5.4 yields $\xi'' n^{11}$ distinct $(\vec{u}, \vec{x}, \vec{w}) \in V^{11}$ with $\vec{u} = (u_1, \dots, u_4)$, $\vec{x} = (x_1, \dots, x_4)$, and $\vec{w} = (w_1, w_2, w_3)$ satisfying properties (*i*) and (*ii*) of the lemma. Obviously, at most

$$11(|X| + 4)n^{10} \leqslant 11\sqrt{\zeta} n^{11} + 44n^{10}$$

of these 11-tuples share a vertex with $X \cup \{a_1, \dots, a_4\}$. Consequently, our choice of $\zeta_0' > \zeta$ guarantees that for sufficiently large n at least $\xi'' n^{11}/2$ of these 11-tuples are disjoint from X and from $\vec{a}$.

Next, for such a fixed 11-tuple $(\vec{u}, \vec{x}, \vec{w})$ we apply Lemma 5.3 for every $i \in [4]$ to a_i and x_i. Each application yields $\xi' n^6$ sextuples $(b_{i1}, \dots, b_{i6})$ satisfying properties (*i*) and (*ii*) of that lemma. Taking into account that we insist that all the vertices b_{ij} for $i \in [4]$ and $j \in [6]$ need to be distinct and different from the already fixed vertices of $\vec{a}$, $\vec{x}$, $\vec{u}$, and $\vec{w}$ this gives rise to at least

$$\frac{1}{2}\big(\xi' n^6\big)^4$$

such choices of $\vec{b}_1, \dots, \vec{b}_4$ for every fixed $(\vec{u}, \vec{x}, \vec{w})$. Summing over all possible choices of $(\vec{u}, \vec{x}, \vec{w})$ leads to at least

$$\frac{1}{2}\xi'' n^{11} \times \frac{1}{2}\big(\xi' n^6\big)^4 \geqslant \xi n^{35}$$

$\vec{a}$-absorbers in H. □

After these preparations we conclude this section with the somewhat standard proof of the absorbing path lemma. In the proof we first find a suitable selection of $\Omega(n)$ disjoint 35-tuples that contain many $\vec{a}$-absorbers for every $\vec{a}$. In the second and final step we then utilise the ζ-connectable end-triples to connect these 35-tuples, each consisting of five disjoint paths of length four, into one absorbing path avoiding the given set $\mathcal{R}$.

Proof of Proposition 5.1. For $\alpha \in (0, 1/3)$ let $\ell \geqslant 3$ be given by Setup 3.1 and let $\zeta_0' = \zeta_0'(\alpha)$ and $\xi = \xi(\alpha)$ be given by Lemma 5.6. Set

$$\zeta_0 = \min\left\{\zeta_0',\ \frac{\xi}{12 \cdot 1400\ell^2}\right\},$$

and for $\zeta_\star \in (0, \zeta_0)$ let $\vartheta_\star$ along with a sufficiently large 4-uniform hypergraph $H = (V, E)$ and $\mathcal{R} \subseteq V$ of size at most $\vartheta_\star^2 n$ be given. Without loss of generality we can assume that $\vartheta_\star < \zeta_\star$.

Applying Lemma 5.6 with $\zeta_\star$ yields for every $\vec{a} \in V^4$ at least ξn^{35} $\vec{a}$-absorbers in H. However, since the absorbing path is required to be disjoint from $\mathcal{R}$, only absorbers disjoint from $\mathcal{R}$ are useful here. Let $\mathcal{A}(\vec{a})$ be the set of all $\vec{a}$-absorbers disjoint from $\mathcal{R}$ and note

$$\big|\mathcal{A}(\vec{a})\big| \geqslant \xi n^{35} - 35|\mathcal{R}|n^{34} \geqslant \frac{\xi}{2} n^{35}\,. \tag{5.2}$$

Let $\mathcal{A} = \bigcup \mathcal{A}(\vec{a}) \subseteq (V \smallsetminus \mathcal{R})^{35}$ be the set of all absorbers outside $\mathcal{R}$, where the union runs over all four tuples $\vec{a} \in V^4$.

We set

$$p = \frac{4\zeta_0 \vartheta_\star}{\xi n^{34}}$$

and consider a random collection $\mathcal{A}_p \subseteq \mathcal{A}$, where every absorber from $\mathcal{A}$ is included independently with probability p. Standard applications of Markov's inequality and of Chernoff's inequality show that with positive probability the random set $\mathcal{A}_p$ satisfies the following three properties

$$\big|\mathcal{A}_p\big| \leqslant 3 \cdot pn^{35}\,, \tag{5.3}$$

$$\big|\{(A, A') \in \mathcal{A}_p^2 \colon A \text{ and } A' \text{ share a vertex}\}\big| \leqslant 3 \cdot 35^2 p^2 n^{69}\,, \tag{5.4}$$

$$\text{and for every } \vec{a} \in V^4 \text{ we have} \quad \big|\mathcal{A}_p \cap \mathcal{A}(\vec{a})\big| \geqslant \frac{1}{2} \cdot p\big|\mathcal{A}(\vec{a})\big|\,. \tag{5.5}$$

Consequently, there exists a collection $\mathcal{B}_0 \subseteq \mathcal{A}$ satisfying (5.3)–(5.5) with $\mathcal{B}_0$ replacing $\mathcal{A}_p$. We further pass to a maximal subcollection $\mathcal{B} \subseteq \mathcal{B}_0$ of mutually disjoint absorbers. The choices of p and ζ_0 combined with (5.2) and $\vartheta_\star < \zeta_\star < \zeta_0$ allow us to transfer (5.3) and (5.5) to the set $\mathcal{B}$ as follows

$$\big|\mathcal{B}\big| \leqslant 3 \cdot pn^{35} = \frac{12\zeta_0\vartheta_\star}{\xi} n \leqslant \frac{\vartheta_\star}{1400\ell^2} n \tag{5.6}$$

and for every $\vec{a} \in V^4$ we have

$$\big|\mathcal{B} \cap \mathcal{A}(\vec{a})\big| \overset{(5.4)}{\geqslant} \frac{1}{2} \cdot p\big|\mathcal{A}(\vec{a})\big| - 3 \cdot 35^2 p^2 n^{69} \geqslant \zeta_0 \vartheta_\star n - 3 \cdot 35^2 \frac{16\zeta_0^2 \vartheta_\star^2}{\xi^2} n \geqslant \frac{1}{2}\vartheta_\star^2 n\,. \tag{5.7}$$

It remains to connect the absorbers from $\mathcal{B}$ into a path. Recall that every 35-tuple in $\mathcal{B}$ consists of five 7-vertex paths with $\zeta_\star$-connectable end-triples and that all those $5|\mathcal{B}|$ paths are mutually vertex disjoint. Let $\mathcal{P}$ be the collection of all these 7-vertex paths.

Finally we construct the absorbing path by connecting all paths from $\mathcal{P}$. For that we consider a maximal family of paths $\mathcal{P}^\star \subseteq \mathcal{P}$ for which there exists a path $P_A^\star \subseteq H - \mathcal{R}$, containing all the paths from $\mathcal{P}^\star$, whose end-triples are $\zeta_\star$-connectable and such that

$$|V(P_A^\star)| = 7 \cdot |\mathcal{P}^\star| + (|\mathcal{P}^\star| - 1) \cdot (8\ell + 10) \overset{\ell \geqslant 3}{\leqslant} 70\ell|\mathcal{B}| \overset{(5.6)}{\leqslant} \frac{\vartheta_\star}{20\ell} n\,. \tag{5.8}$$

Clearly, $\mathcal{P}^\star \neq \varnothing$ and thus, $P_A^\star \neq \varnothing$. Assume for the sake of contradiction that there is some $P \in \mathcal{P} \smallsetminus \mathcal{P}^\star$ and let (x, y, z) be the starting triple of P. Moreover, let (a, b, c) be the ending triple of $P_A^\star$. Since both triples (a, b, c) and (x, y, z) are ζ-connectable, Proposition 3.3 tells us that there are at least $\vartheta_\star n^{8\ell+10}$ abc-xyz-paths with $8\ell + 10$ inner vertices in H. Since (5.8) combined with $|\mathcal{R}| \leqslant \vartheta_\star^2 n$ yields

$$\vartheta_\star n^{8\ell+10} - (8\ell + 10)\big(\big|V(P_A^\star)\big| + \big|\mathcal{R}\big|\big) n^{8\ell+9} > 0\,,$$

there is at least one connecting path disjoint to $V(P_A^\star)\cup\mathcal{R}$ giving rise to a path $P_A^{\star\star}\subseteq H-\mathcal{R}$ containing $\mathcal{P}^\star\cup\{P\}$. This contradicts the maximality of $\mathcal{P}^\star$ and consequently the desired path P_A containing all paths from $\mathcal{P}$ does really exist.

In fact, Property *(i)* of Proposition 5.1 is a consequence of (5.8) and part *(ii)* is also clear from the definition. For part *(iii)* of Proposition 5.1, let Z be a set outside P_A of size at most $2\vartheta_\star^2 n$ with $|Z|\equiv 0 \pmod 4$. It follows from (5.7), that one can successively absorb quadruples of distinct vertices of Z into the path, at least $\vartheta_\star^2 n/2$ times, always having at least one unused absorber at hand. □

§6. Path cover lemma

The goal of this section is to establish the following 4-uniform variant of Lemma 2.14.

Proposition 6.1 (Path cover lemma for 4-uniform hypergraphs)**.** *For every $\alpha\in(0,1/4)$ there is a constant $\vartheta_0(\alpha)>0$ such that for every positive $\vartheta_\star<\vartheta_0(\alpha)$ there are a constant $\zeta_{\star\star}=\zeta_{\star\star}(\alpha,\vartheta_\star)>0$ and arbitrarily large natural numbers M with $M\equiv 3 \pmod 4$ such that the following holds.*

Given Setup 3.1 and a set $X\subseteq V$ with $|X|\leqslant 2\vartheta_\star n$ we can cover all but at most $\vartheta_\star^2 n$ vertices of $H-X$ by disjoint M-vertex paths that start and end with a $\zeta_{\star\star}$-connectable triple.

We would like to remark that the constants in this statement can be thought of as forming a hierarchy $\alpha\gg\vartheta_\star\gg\zeta_{\star\star}\gg M^{-1}\gg n^{-1}$. In our intended application, the set X will be the union of the reservoir and the vertex set of the absorbing path. Moreover, it will be important that we have the liberty to take M to be substantially larger than the reciprocal of a further constant $\vartheta_{\star\star}$ obtained by applying the connecting lemma to $\zeta_{\star\star}$.

Proof. Recall that Setup 3.1 involves a constant $\beta>0$ as well as a natural number $\ell\geqslant 3$. We will assume throughout that $\alpha,\beta,\ell^{-1}\gg\vartheta_\star\gg\zeta_{\star\star}$ without calculating these dependencies explicitly. Let $P\subseteq 3\mathbb{N}$ be the infinite arithmetic progression which the 3-uniform Proposition 2.12 delivers for $\alpha/4$ and $\zeta_{\star\star}$ here in place of α and ξ there. Now let $M\gg\zeta_{\star\star}^{-1}$ be a sufficiently large natural number with $M\equiv 3 \pmod 4$ and $\frac{3}{4}(M+1)\in P$. The number M will play two different rôles and hoping to enhance the visibility of this fact we set $m=M$.

Now let a 4-uniform hypergraph $H=(V,E)$ on $n\gg M$ vertices satisfying the minimum pair degree condition $\delta_2(H)\geqslant\left(\frac{5}{9}+\alpha\right)\frac{n^2}{2}$ as well as a family $\left\{R_{uv}\colon uv\in V^{(2)}\right\}$ of robust subgraphs of its link graphs exemplifying Setup 3.1 be given. Set

$$\mathscr{P}=\left\{P\subseteq H-X\colon P \text{ is an } M\text{-vertex path whose end-triples are } \zeta_{\star\star}\text{-connectable}\right\}$$

and consider a maximum collection $\mathscr{C} \subseteq \mathscr{P}$ of vertex-disjoint paths. We are to establish that the set

$$U = V \smallsetminus \Big(X \cup \bigcup\nolimits_{C \in \mathscr{C}} V(C)\Big)$$

of uncovered vertices satisfies

$$|U| \leqslant \vartheta_\star^2 n\,, \tag{6.1}$$

so for the rest of the proof we can assume that (6.1) is false. Our strategy for obtaining a contradiction is that we find up to m appropriate paths in $\mathscr{C}$ and show that the union of their vertex sets with U spans at least $m+1$ vertex-disjoint paths from $\mathscr{P}$. For a vertex $u \in U$ to have some chances to participate in this rerouting its link hypergraph should be somewhat "typical" and our next step is to identify a set $U_{\text{bad}} \subseteq U$ of bad vertices which we will not use for incrementing $\mathscr{C}$.

Recall that, as discussed between Setup 3.1 and Definition 3.2, for every $u \in U$ the link hypergraph $\overline{H}_u$ and the family $\big\{R_{uv} \colon v \in V \smallsetminus \{u\}\big\}$ of (β, ℓ)-robust graphs realise Setup 2.4. Due to $\vartheta_\star \ll \ell^{-1}, \beta, \alpha$ and our assumption $|X| \leqslant 2\vartheta_\star n$ it follows that the hypergraph $\overline{H}_u - X$ and the family

$$\Psi = \big\{R_{uv} - X \colon v \in V \smallsetminus (X \cup \{u\})\big\}$$

of $(\beta/2, \ell)$-robust graphs exemplify Setup 2.4 with $(\alpha/2, \beta/2, \alpha^3/9)$ here in place of (α, β, μ) there. In particular, we can speak of $\zeta_{\star\star}$-connectable pairs and $\zeta_{\star\star}$-bridges with respect to the constellation $(\overline{H}_u - X, \Psi)$ and in the sequel we shall call them $(\zeta_{\star\star}, X)$-*connectable pairs in* $\overline{H}_u - X$ and $(\zeta_{\star\star}, X)$-*bridges in* $\overline{H}_u - X$, respectively. To clarify the relation between these concepts, we remark that every $(2\zeta_{\star\star}, X)$-connectable pair of distinct vertices from $H_u - X$ is, in particular $\zeta_{\star\star}$-connectable in H_u. Consequently, every $(2\zeta_{\star\star}, X)$-bridge in $\overline{H}_u - X$ is a $\zeta_{\star\star}$-bridge in $\overline{H}_u$. Now the vertices that we will not touch while refuting the maximality of $\mathscr{C}$ are those in the set

$$U_{\text{bad}} = \big\{u \in U \colon \text{the number of } (2\zeta_{\star\star}, X)\text{-bridges in } \overline{H}_u - X \text{ which are } \zeta_{\star\star}\text{-connectable in } H \text{ is at most } n^3/8\big\}\,.$$

Claim 6.2. *We have* $|U_{\text{bad}}| \leqslant 8\zeta_{\star\star} n$.

Proof. Consider the set

$$\Pi = \big\{(u, e) \in U_{\text{bad}} \times V^3 \colon \text{the triple } e \text{ is a } (2\zeta_{\star\star}, X)\text{-bridge in } \overline{H}_u - X, \text{ but not } \zeta_{\star\star}\text{-connectable in } H\big\}\,.$$

Since for $u \in U_{\text{bad}}$ every $(2\zeta_{\star\star}, X)$-bridge in $\overline{H}_u - X$ is a $\zeta_{\star\star}$ bridge in $\overline{H}_u$, Lemma 3.7 tells us that

$$|\Pi| \leqslant \zeta_{\star\star} n^4 \,.$$

On the other hand, for every $u \in U_{\text{bad}}$ the number of $(2\zeta_{\star\star}, X)$-bridges in $\overline{H}_u - X$ is at least $(n - |X|)^3/3$ by Lemma 2.9 and by the definition of U_{bad} all but at most $n^3/8$ of them fail to be $\zeta_{\star\star}$-connectable in H, whence

$$|\Pi| \geqslant |U_{\text{bad}}| \left(\frac{(n - |X|)^3}{3} - \frac{n^3}{8} \right) \geqslant \frac{|U_{\text{bad}}| n^3}{8} \,.$$

Comparing our estimates on $|\Pi|$ we obtain indeed that $|U_{\text{bad}}| \leqslant 8\zeta_{\star\star} n$. □

Useful societies. Denote the vertex sets of the paths in our maximum collection $\mathscr{C}$ by $B_1, \ldots, B_{|\mathscr{C}|}$ and fix an arbitrary partition

$$U = B_{|\mathscr{C}|+1} \cup \ldots \cup B_\nu \cup B'$$

with

$$|B_{|\mathscr{C}|+1}| = \ldots = |B_\nu| = M > |B'| \,.$$

The sets belonging to the family

$$\mathscr{B} = \{B_1, \ldots, B_\nu\}$$

will be referred to as *blocks*. The size of their union

$$B = B_1 \cup B_2 \cup \ldots \cup B_\nu$$

is bounded from below by

$$|B| = n - |X| - |B'| \geqslant (1 - 2\vartheta_\star)n - M \geqslant (1 - 3\vartheta_\star)n \,. \tag{6.2}$$

By a *society* we mean a set consisting of m blocks and we shall write $\mathfrak{S}$ for the collection of all $\binom{\nu}{m}$ societies.

Definition 6.3. *A society $\mathcal{S} \in \mathfrak{S}$ with $S = \bigcup \mathcal{S}$ is useful for a vertex $u \in U \smallsetminus S$ if*

(*i*) $\delta_1(H_u[S]) \geqslant \left(\frac{5}{9} + \frac{\alpha}{4}\right) \frac{(mM)^2}{2}$,

(*ii*) *the family of graphs $\{R_{ux}[S] \colon x \in S\}$ exemplifies Setup 2.4 for $H_u[S]$ with $(\alpha/4, \beta/2, \alpha/16)$ here in place of (α, β, μ) there,*

(*iii*) *and there are at least $\zeta_{\star\star} m^3 M^3$ triples in S^3 that are $\zeta_{\star\star}$-connectable in H and $\zeta_{\star\star}$-bridges in $H_u[S]$ with respect to the robust graphs in $\{R_{ux}[S] \colon x \in S\}$.*

We shall argue that if a society $\mathcal{S}$ is useful for many vertices in U, then $U \cup \bigcup \mathcal{S}$ spans $m + 1$ disjoint paths from $\mathscr{P}$, contrary to the maximality of $|\mathscr{C}|$. The following claim provides a first step in this direction.

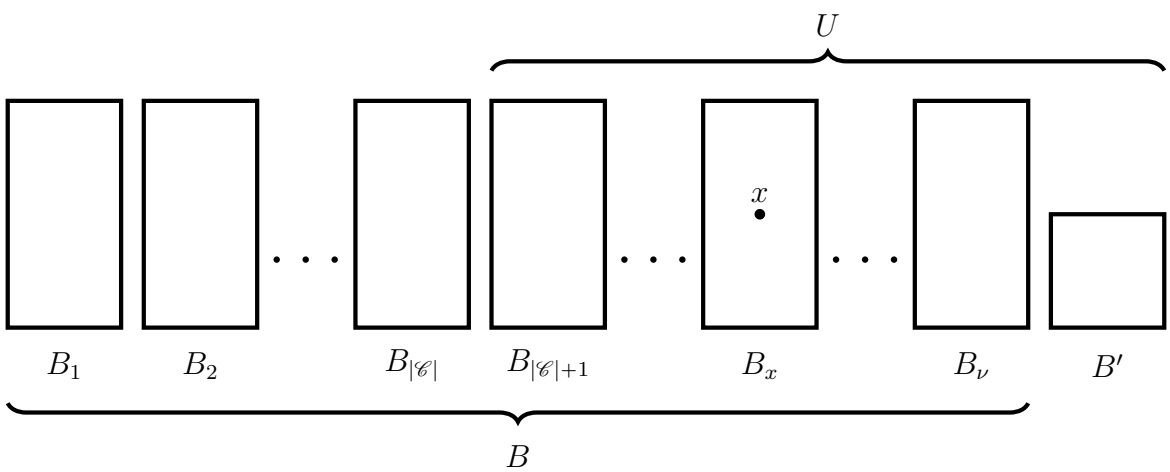

FIGURE 6.1. Block partition of $V \smallsetminus X$ for given $\mathscr{C}$.

Claim 6.4. *If a society $\mathcal{S} \in \mathfrak{S}$ is useful for a vertex $u \in U$ and $S = \bigcup \mathcal{S}$, then there exist $m+1$ vertex-disjoint 3-uniform paths in $H_u[S]$ each of which has $\frac{3}{4}(M+1)$ vertices and starts and ends with a triple which is $\zeta_{\star\star}$-connectable in H.*

Proof. We can apply Proposition 2.12 with $(\alpha/4, \zeta_{\star\star})$ here in place of (α, ξ) there to the hypergraph $H_u[S]$, the family $\{R_{ux}[S] \colon x \in S\}$ of robust graphs, the set

$$\Xi = \{e \in S^3 \colon e \text{ is a } \zeta_{\star\star}\text{-bridge in } H_u[S] \text{ and } \zeta_{\star\star}\text{-connectable in } H\}$$

of bridges and to $\frac{3}{4}(M+1)$ here in place of M there. This yields a collection $\mathscr{W}$ of vertex-disjoint 3-uniform $\frac{3}{4}(M+1)$-vertex paths in $H_u[S]$ with

$$\Big| S \smallsetminus \bigcup\nolimits_{W \in \mathscr{W}} V(W) \Big| \leqslant \zeta_{\star\star} M m + M$$

such that every path in $\mathscr{W}$ starts and ends with a triple from Ξ. In particular, the paths in $\mathscr{W}$ start and end with triples which are $\zeta_{\star\star}$-connectable in H. It remains to show $|\mathscr{W}| \geqslant m+1$, which follows from the fact that due to $M = m \geqslant 15$ we have

$$|\mathscr{W}| \geqslant \frac{(1-\zeta_{\star\star})Mm - M}{\frac{3}{4}(M+1)} \geqslant \frac{\frac{9}{10}Mm - M}{\frac{4}{5}M} = \frac{9}{8}m - \frac{5}{4} > m\,. \qquad \square$$

To conclude the proof of Proposition 6.1 we need another result on useful societies whose proof we postpone.

Claim 6.5. *For every $u \in U \smallsetminus U_{bad}$ there are at least $\frac{2}{3}|\mathfrak{S}|$ useful societies.*

Since we assume that (6.1) is false, Claim 6.2 yields

$$|U \smallsetminus U_{\text{bad}}| \geqslant (\vartheta_\star^2 - 8\zeta_{\star\star})n \geqslant \frac{\vartheta_\star^2}{2} n\,.$$

By Claim 6.5 and double counting there exists a society $\mathcal{S}$ which is useful for at least $\frac{2}{3}|U \smallsetminus U_{\text{bad}}| \geqslant \vartheta_\star^2 n/3$ vertices from U. Next, Claim 6.4 allows us to choose for every such vertex u a collection $\mathscr{W}_u$ of $m+1$ paths in $H_u[S]$ each of which consists of $\frac{3}{4}(M+1)$ vertices and starts and ends with a triple that is $\zeta_{\star\star}$-connectable in H. As there are no more than $(Mm)!$ possibilities for $\mathscr{W}_u$, there exist a collection $\mathscr{W}$ of 3-uniform paths on S and a set $U' \subseteq U$ such that $\mathscr{W}_u = \mathscr{W}$ for every $u \in U'$ and

$$|U'| \geqslant \frac{\vartheta_\star^2 n}{3(Mm)!} \geqslant \frac{1}{4}(M-3)(m+1)\,,$$

where the second inequality uses $n \gg M = m$. Now we augment every path in $\mathscr{W}$ by inserting $(M-3)/4$ vertices from U' in every fourth position (see Figure 6.2), thus obtaining $m+1$ mutually disjoint 4-uniform M-vertex paths. As the $m+1$ paths obtained in this way start and end with $\zeta_{\star\star}$-connectable triples, the new paths are in $\mathscr{P}$. Thus, if we remove from $\mathscr{C}$ the paths whose vertex sets belong to the useful society $\mathcal{S}$ and add the newly constructed paths, we obtain a collection of paths contradicting the maximality of $\mathscr{C}$. This contradiction proves the validity of (6.1) and, hence, concludes the proof of Proposition 6.1 based on Claim 6.5.

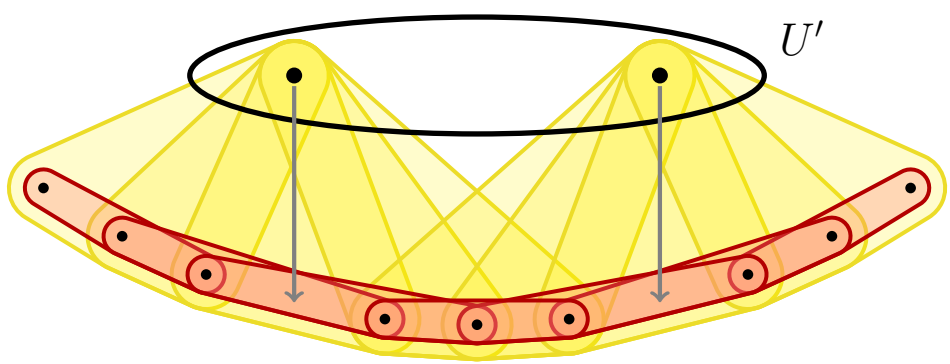

FIGURE 6.2. Augmenting a $\frac{3}{4}(M+1)$-vertex 3-uniform path to an M-vertex 4-uniform path.

Proof of Claim 6.5. Fix a vertex $u \in U \smallsetminus U_{\text{bad}}$. We shall prove that the probability that a society $\mathcal{S} \in \mathfrak{S}$ chosen uniformly at random fails to be useful for u is $\exp\bigl(-\Omega(m)\bigr)$, where the implicit constant only depends on α, β, ℓ, $\vartheta_\star$ and $\zeta_{\star\star}$. So a sufficiently large choice of $M = m$ allows us to push this probability below $1/3$, as desired.

We will apply Corollary A.3 several times to the partition

$$V = B_1 \mathbin{\dot\cup} \ldots \mathbin{\dot\cup} B_\nu \mathbin{\dot\cup} (B' \mathbin{\dot\cup} X)$$

or to a partition derived from it by relocating up to three of the blocks $B_1, \dots, B_\nu$ to the exceptional set. By (6.2) we can take $\eta = 4\vartheta_\star$ in all these applications. It will be convenient to write B_x for the block containing a vertex $x \in B$.

We begin by estimating the probability of the unfortunate event $\mathfrak{E}_1$ that the minimum vertex-degree condition in Definition 6.3 (*i*) fails for our random society, i.e.,

$$\mathfrak{E}_1 = \left\{ \mathcal{S} \in \mathfrak{S} \colon \delta_1(H_u[S]) < \left(\frac{5}{9} + \frac{\alpha}{4}\right) \frac{M^2 m^2}{2} \right\} .$$

Since u is isolated in H_u, this event occurs whenever $u \in S$ and we have

$$\begin{aligned} \mathbb{P}(\mathfrak{E}_1) &\leqslant \mathbb{P}(u \in S) \\ &\quad + \sum_{x \in B \smallsetminus \{u\}} \mathbb{P}(x \in S)\, \mathbb{P}\left(e_{H_{ux}}(S \smallsetminus B_x) < \left(\frac{5}{9} + \frac{\alpha}{2}\right) \frac{M^2 (m-1)^2}{2} \;\middle|\; x \in S \right) , \end{aligned} \tag{6.3}$$

where the reason for excluding the set B_x is that conditioned on $x \in S$ the random variable $e_{H_{ux}}(S \smallsetminus B_x)$ is more pleasant to work with than $e_{H_{ux}}(S)$. For a fixed vertex $x \in B \smallsetminus \{u\}$ we want to derive an upper bound on the probability summed in (6.3) by applying Corollary A.3 (*b*) with $k = 2$ to the graph H_{ux}. Our assumption on H yields

$$e(H_{ux}) \geqslant \left(\frac{5}{9} + \alpha\right) \frac{n^2}{2}$$

and given the event $x \in S$, or equivalently $B_x \in \mathcal{S}$, the variable $e_{H_{ux}}(S \smallsetminus B_x)$ is determined by a random selection of $m-1$ blocks from $\mathscr{B} \smallsetminus \{B_x\}$. So by Corollary A.3 (*b*) with $m-1$ in place of m and $\xi = \alpha/2$ we obtain

$$\mathbb{P}\left(e_{H_{ux}}(S \smallsetminus B_x) < \left(\frac{5}{9} + \frac{\alpha}{2}\right) \frac{M^2 (m-1)^2}{2} \;\middle|\; x \in S \right) \leqslant \exp\bigl(-\Omega(m)\bigr) .$$

Together with (6.3) this yields

$$\mathbb{P}(\mathfrak{E}_1) \leqslant \frac{m}{\nu} + \Bigl(\sum_{x \in B \smallsetminus \{u\}} \mathbb{P}(x \in S) \Bigr) \exp\bigl(-\Omega(m)\bigr) \leqslant \frac{m}{\nu} + Mm \exp\bigl(-\Omega(m)\bigr)$$

and for sufficiently large $n \gg M = m$ this shows that

$$\mathbb{P}(\mathfrak{E}_1) \leqslant \exp\bigl(-\Omega(m)\bigr) . \tag{6.4}$$

Proceeding with the second item in Definition 6.3 we let $\mathfrak{E}_2$ be the bad event that, for our fixed vertex $u \in U \smallsetminus U_{\text{bad}}$, the family of graphs $\bigl\{ R_{ux}[S] \colon x \in S \bigr\}$ fails to exemplify Setup 2.4 for $H_u[S]$ with $(\alpha/4, \beta/2, \alpha/16)$ here in place of (α, β, μ) there. We analyse $\mathfrak{E}_2$ by considering for every fixed $x \in B \smallsetminus \{u\}$ the event $\mathfrak{E}_2'(x)$ that $R_{ux}[S]$ fails to be $(\beta/2, \ell)$-robust and the event $\mathfrak{E}_2''(x)$ that one of the estimates required by Setup 2.4 fails. Observe that in the present context these estimates read as follows:

- $|V(R_{ux}) \cap S| \geqslant \bigl(\frac{2}{3} + \frac{\alpha}{8}\bigr) Mm$,

- $e_{H_{ux}}\big(V(R_{ux}) \cap S, S \smallsetminus V(R_{ux})\big) \leqslant \frac{1}{16}\alpha M^2 m^2$, and
- $e(R_{ux}) \geqslant \left(\frac{5}{9} + \frac{\alpha}{8}\right) \frac{M^2m^2}{2} - \frac{(|S \smallsetminus V(R_{ux})|)^2}{2} \geqslant \left(\frac{4}{9} + \frac{1}{6}\alpha\right) \frac{M^2m^2}{2}$.

Consider a fixed vertex $x \in B \smallsetminus \{u\}$. For any two distinct vertices $y, z \in V(R_{ux})$ we let $P_{xyz} \subseteq V^{\ell-1}$ be a set of $(\ell-1)$-tuples encoding the inner vertices of the ℓ-edge paths in R_{ux} from y to z and we let $\mathfrak{P}_{xyz}$ be the event that $|P_{xyz} \cap S^{\ell-1}| \leqslant \frac{1}{2}\beta |V(R_{ux}) \cap S|^{\ell-1}$. By the law of total probability we have

$$\mathbb{P}(\mathfrak{E}_2'(x) \mid x \in S) \leqslant \sum_{yz \in V(R_{ux})^{(2)}} \mathbb{P}(y, z \in S)\, \mathbb{P}(\mathfrak{P}_{xyz} \mid x, y, z \in S)\,. \tag{6.5}$$

Let us look at a fixed pair $yz \in V(R_{ux})^{(2)}$. Since R_{ux} is (β, ℓ)-robust, we know that $|P_{xyz}| \geqslant \beta |V(R_{ux})|^{\ell-1}$ and, therefore, the set

$$P'_{xyz} = P_{xyz} \cap \big(V \smallsetminus (B_x \cup B_y \cup B_z)\big)^{\ell-1}$$

corresponding to those paths in P_{xyz} that avoid $B_x \cup B_y \cup B_z$ satisfies

$$|P'_{xyz}| \geqslant \frac{5}{6}\beta(\varrho n)^{\ell-1}\,,$$

where $\varrho = |V(R_{ux})|/n > 2/3$. For $d = \big|\{B_x, B_y, B_z\}\big| \in [3]$ we deduce from Corollary A.3 (*a*) (by moving B_x, B_y, and B_z into the exceptional set) that

$$\begin{aligned}\mathbb{P}\big(|P'_{xyz} \cap S^{\ell-1}| \leqslant \tfrac{2}{3}\beta(\varrho M m)^{\ell-1} \;\big|\; x, y, z \in S\big)\\ \leqslant \mathbb{P}\big(|P'_{xyz} \cap S^{\ell-1}| \leqslant \tfrac{3}{4}\beta\big(\varrho M(m-d)\big)^{\ell-1} \;\big|\; x, y, z \in S\big) \leqslant \exp\big(-\Omega(m)\big)\,.\end{aligned} \tag{6.6}$$

Similarly, Corollary A.3 (*a*) applied with $k = 1$ to the set $\Lambda = V(R_{ux}) \smallsetminus (B_x \cup B_y \cup B_z)$ yields

$$\mathbb{P}\left(\left|\frac{|\Lambda \cap S|}{M(m-d)} - \frac{|\Lambda|}{n}\right| \geqslant \frac{1}{9\ell} \;\middle|\; x, y, z \in S\right) \leqslant \exp\big(-\Omega(m)\big)\,.$$

In particular, the random variable $\varrho_S = |V(R_{ux}) \cap S|/(Mm)$ satisfies

$$\mathbb{P}\left(|\varrho_S - \varrho| \geqslant \frac{1}{8\ell} \;\middle|\; x, y, z \in S\right) \leqslant \exp\big(-\Omega(m)\big)\,. \tag{6.7}$$

Now if both of the likely events $|P'_{xyz} \cap S^{\ell-1}| > \frac{2}{3}\beta(\varrho M m)^{\ell-1}$ and $|\varrho - \varrho_S| < 1/(8\ell)$ hold, then $\varrho_S > 1/2$ and

$$\frac{|P'_{xyz} \cap S^{\ell-1}|}{\beta(Mm)^{\ell-1}} > \frac{2}{3}\varrho^{\ell-1} > \frac{2}{3}\left(\varrho_S - \frac{1}{8\ell}\right)^{\ell-1} \geqslant \frac{2}{3}\varrho_S^{\ell-1}\left(1 - \frac{1}{4\ell}\right)^{\ell} \geqslant \frac{1}{2}\varrho_S^{\ell-1}\,. \tag{6.8}$$

Adding (6.6) and (6.7) we deduce from (6.8) that

$$\mathbb{P}\big(|P'_{xyz} \cap S^{\ell-1}| \leqslant \tfrac{1}{2}\beta(\varrho_S M m)^{\ell-1} \;\big|\; x, y, z \in S\big) \leqslant \exp\big(-\Omega(m)\big)\,,$$

whence

$$\mathbb{P}\big(\mathfrak{P}_{xyz}\big) \leqslant \exp\big(-\Omega(m)\big)\,.$$

As this holds for every pair $yz \in V(R_{ux})^{(2)}$ we conclude from (6.5) that

$$\mathbb{P}(\mathfrak{E}_2'(x) \mid x \in S) \leqslant \Big(\sum_{yz \in V(R_{ux})^{(2)}} \mathbb{P}(y, z \in S)\Big) \exp\big(-\Omega(m)\big) \leqslant \binom{Mm}{2} \exp\big(-\Omega(m)\big)\,.$$

Summarising the argument so far, we have proved

$$\mathbb{P}\big(\mathfrak{E}_2'(x) \bigm| x \in S\big) \leqslant \exp\big(-\Omega(m)\big)$$

for every $x \in B \smallsetminus \{u\}$. Similar but easier considerations based on Corollary A.3 show that

$$\mathbb{P}\big(\mathfrak{E}_2''(x) \bigm| x \in S\big) \leqslant \exp\big(-\Omega(m)\big)$$

holds as well and we leave the details of this derivation to the reader. Returning now to the event $\mathfrak{E}_2$ that the family $\big\{R_{ux}[S] \colon x \in S\big\}$ fails to exemplify Setup 2.4 for $H_u[S]$ with $(\alpha/4, \beta/2, \alpha/16)$ here in place of (α, β, μ) there we obtain

$$\mathbb{P}(\mathfrak{E}_2) \leqslant \mathbb{P}(u \in S) + \sum_{x \in B \smallsetminus \{u\}} \mathbb{P}\big(\mathfrak{E}_2'(x) \cup \mathfrak{E}_2''(x) \bigm| x \in S\big) \leqslant \frac{m}{\nu} + Mm \exp\big(-\Omega(m)\big)\,,$$

i.e.,

$$\mathbb{P}(\mathfrak{E}_2) \leqslant \exp\big(-\Omega(m)\big)\,. \tag{6.9}$$

It remains to analyse the adverse event $\mathfrak{E}_3$ that the third clause of Definition 6.3 fails. Consider any pair of vertices $yz \in (B \smallsetminus \{u\})^2$ which is $(2\zeta_{\star\star}, X)$-connectable in $\overline{H}_u - X$. Recall that this means that a certain set $U_{yz} \subseteq V \smallsetminus X$ of witnesses definable from the family of robust graphs $\big\{R_{uv} - X \colon v \in V \smallsetminus (X \cup \{u\})\big\}$ satisfies $|U_{yz}| \geqslant 2\zeta_{\star\star}|V \smallsetminus X|$ and, hence, $|U_{yz} \smallsetminus (B_y \cup B_z)| \geqslant (3/2)\zeta_{\star\star}|V \smallsetminus X|$. Corollary A.3 (*a*) applied to $V \smallsetminus X$, the block partition with exceptional set $B' \cup B_y \cup B_z$, and with the constants $\eta = \zeta_{\star\star}^2$, $\xi = \zeta_{\star\star}/4$ shows that

$$\mathbb{P}\big(|(U_{yz} \cap S) \smallsetminus (B_y \cup B_z)| \leqslant \zeta_{\star\star} Mm \bigm| y, z \in S\big) \leqslant \exp\big(-\Omega(m)\big)\,.$$

As this holds for every $(2\zeta_{\star\star}, X)$-connectable pair yz, it follows in the usual way that

$$\begin{aligned}\mathbb{P}(\neg\mathfrak{E}_2 \text{ and some } (2\zeta_{\star\star}, X)\text{-connectable pair belonging to } S^{(2)} \\ \text{is not } \zeta_{\star\star}\text{-connectable in } H_u[S]) \leqslant \exp\big(-\Omega(m)\big)\,,\end{aligned}$$

where the reason for adding the conjunct $\neg\mathfrak{E}_2$ is that it makes the notion of connectable pairs in $H_u[S]$ meaningful. Due to the definition of bridges in terms of connectable pairs it

follows that

$$\mathbb{P}(\neg\mathfrak{E}_2 \text{ and some } (2\zeta_{\star\star}, X)\text{-bridge belonging to } S^3 \\ \text{is not a } \zeta_{\star\star}\text{-bridge in } H_u[S]) \leqslant \exp\bigl(-\Omega(m)\bigr)\,. \quad (6.10)$$

Since $u \notin U_{\text{bad}}$ the set

$$\Phi_u = \bigl\{e \in V^3 \colon e \text{ is a } \zeta_{\star\star}\text{-connectable } (2\zeta_{\star\star}, X)\text{-bridge}\bigr\}$$

has size $|\Phi_u| \geqslant n^3/8$ and a final application of Corollary A.3 (*a*) with $k = 3$ shows that this set scales appropriately to S in the sense that

$$\mathbb{P}\left(|\Phi_u \cap S^3| \leqslant M^3 m^3/16\right) \leqslant \exp\bigl(-\Omega(m)\bigr)\,.$$

Together with (6.10) this proves

$$\mathbb{P}(\neg\mathfrak{E}_2 \;\&\; \mathfrak{E}_3) \leqslant \exp\bigl(-\Omega(m)\bigr)$$

and by adding (6.4) as well as (6.9) we finally obtain

$$\mathbb{P}(\mathcal{S} \text{ is not useful for } u) \leqslant \exp\bigl(-\Omega(m)\bigr)\,.$$

This concludes the proof of Claim 6.5 and, hence, the proof of Proposition 6.1. □

§7. The proof of the main result

In this section we give the routine derivation of Theorem 1.3 from the results in Sections 3 – 6.

Proof of Theorem 1.3. We can assume that $\alpha > 0$ is sufficiently small. Now we choose an appropriate hierarchy of constants

$$\alpha \gg \beta, \ell^{-1} \gg \zeta_\star \gg \vartheta_\star \gg \zeta_{\star\star} \gg \vartheta_{\star\star} \gg M^{-1} \gg n_0^{-1}\,.$$

We recall that Corollary 3.5 yields four natural numbers $\ell_1, \ell_2, \ell_3, \ell_4 \leqslant 50\ell$.

Let $H = (V, E)$ be a 4-uniform hypergraph on $|V| = n \geqslant n_0$ vertices satisfying the minimum pair degree condition $\delta_2(H) \geqslant \left(\frac{5}{9} + \alpha\right)\frac{n^2}{2}$. We need to construct a Hamiltonian cycle in H. Appealing to Proposition 2.2 with $\mu = \alpha^3/18$ we choose for every pair $uv \in V^{(2)}$ a (β, ℓ)-robust subgraph $R_{uv} \subseteq H_{uv}$ of its link graph. Notice that H and the family of robust graphs

$$\{R_{uv} \colon uv \in V^{(2)}\}$$

realise Setup 3.1. Proposition 4.1 allows us to choose a reservoir set $\mathcal{R}$ with $|\mathcal{R}| \leqslant \vartheta_\star^2 n$ which by Corollary 4.2 has the property that if a subset $\mathcal{R}' \subseteq \mathcal{R}$ with $|\mathcal{R}'| \leqslant \vartheta_{\star\star}^2 n$ has "already been used", then for every $i \in [4]$ we can still connect any two disjoint $\zeta_{\star\star}$-connectable

triples by a path through $\mathcal{R} \smallsetminus \mathcal{R}'$ having ℓ_i inner vertices. Next we apply Proposition 5.1 to obtain an (absorbing) path $P_A \subseteq H - \mathcal{R}$ such that

(*i*) $|V(P_A)| \leqslant \vartheta_\star n$,
(*ii*) the end-triples of P_A are $\zeta_\star$-connectable,
(*iii*) and for every subset $Z \subseteq V \smallsetminus V(P_A)$ with $|Z| \leqslant 2\vartheta_\star^2 n$ and $|Z| \equiv 0 \pmod 4$, there is a path $Q \subseteq H$ with the same end-triples as P_A and $V(Q) = V(P_A) \cup Z$.

As the set $X = \mathcal{R} \cup V(P_A)$ satisfies $|X| \leqslant (\vartheta_\star + \vartheta_\star^2)n \leqslant 2\vartheta_\star n$, Proposition 6.1 yields a collection $\mathscr{C}$ of M-vertex paths starting and ending with $\zeta_{\star\star}$-connectable triples such that the set

$$J = V \smallsetminus \Big(V(P_A) \cup \mathcal{R} \cup \bigcup\nolimits_{P \in \mathscr{C}} V(P)\Big)$$

of uncovered vertices satisfies $|J| \leqslant \vartheta_\star^2 n$.

Now we want to form an almost spanning cycle in H by connecting the paths in $\mathscr{C}$ and P_A through the reservoir. For each of the first $|\mathscr{C}|$ of these connections we want use ℓ_1 vertices from the reservoir, which altogether requires

$$\ell_1 |\mathscr{C}| \leqslant \frac{50\ell n}{M} \leqslant \vartheta_{\star\star}^2 n$$

vertices from the reservoir. In other words, there arises no problem if we choose these connections one by one, thus creating a path T possessing $|\mathscr{C}|(\ell_1 + M) + |V(P_A)|$ vertices. Moreover, the set $V(T) \cap \mathcal{R}$ of used vertices is so small that we can still make a last connection to close the desired cycle. For this last connection we use ℓ_i inner vertices, where $i \in [4]$ is determined in such a way that $i \equiv n - |V(T)| \pmod 4$. In this manner, we obtain a cycle C containing the absorbing path P_A such that the set $Z = V \smallsetminus V(C)$ of left-over vertices satisfies

$$|Z| \equiv n - |V(C)| \equiv n - |V(T)| - \ell_i \equiv i - \ell_i \equiv 0 \pmod 4$$

as well as

$$|Z| = |Z \smallsetminus \mathcal{R}| + |Z \cap \mathcal{R}| \leqslant |J| + |\mathcal{R}| \leqslant 2\vartheta_\star^2 n\,.$$

So by property (*iii*) of the absorbing path we can absorb Z into P_A, thus arriving at the desired Hamiltonian cycle. Thereby Theorem 1.3 is proved. □

§Appendix A. Weighted Janson Inequality

In the proof of Claim 6.5 we use a probabilistic concentration result that follows from the following weighted variant of Janson's inequality.

Lemma A.1 (Weighted Janson Inequality)**.** *For a nonempty set V and $p \in [0,1]$ let V_p be the binomial subset of V including every element of V independently and uniformly at random with probability p. Let $w\colon \wp(V) \longrightarrow \mathbb{R}_{\geqslant 0}$ be a weight function and let*

$$X = \sum_{A \in \wp(V)} w(A) \mathbb{1}_{A \subseteq V_p}$$

be the random variable giving the total weight of $\wp(V_p)$. Setting

$$\Delta = \sum_{\substack{A,B \in \wp(V) \\ A \cap B \neq \varnothing}} w(A)\, w(B)\, \mathbb{P}(A \cup B \subseteq V_p)$$

we have

$$\mathbb{P}\big(X \leqslant \mathbb{E}X - t\big) \leqslant \exp\left(-\frac{t^2}{2\Delta}\right)$$

for every $t \in [0, \mathbb{E}X]$.

It is straightforward to check that Janson's original proof (see e.g. [6]) extends to this weighted setting but for the sake of completeness we give the details.

Proof. Let $\Psi\colon \mathbb{R}_{\geqslant 0} \longrightarrow \mathbb{R}_{>0}$ be the function $s \longmapsto \mathbb{E}[\mathrm{e}^{-sX}]$. Clearly, Ψ is differentiable with the derivative

$$-\Psi'(s) = \mathbb{E}[X\mathrm{e}^{-sX}] = \sum_{A \subseteq V} w(A)\, \mathbb{P}(A \subseteq V_p)\, \mathbb{E}[\mathrm{e}^{-sX} \mid A \subseteq V_p]\,. \tag{A.1}$$

For every $A \subseteq V$ we split $X = Y_A + Z_A$, where

$$Y_A = \sum_{A \cap B \neq \varnothing} w(B) \mathbb{1}_{B \subseteq V_p} \quad \text{and} \quad Z_A = \sum_{A \cap B = \varnothing} w(B) \mathbb{1}_{B \subseteq V_p}\,.$$

Now the FKG inequality yields

$$\mathbb{E}[\mathrm{e}^{-sX} \mid A \subseteq V_p] \geqslant \mathbb{E}[\mathrm{e}^{-sY_A} \mid A \subseteq V_p] \cdot \mathbb{E}[\mathrm{e}^{-sZ_A} \mid A \subseteq V_p]\,,$$

where in view of the independence of $A \subseteq V_p$ and Z_A the second factor is at least $\Psi(s)$. Applying the trivial estimate $\mathrm{e}^{-x} \geqslant 1 - x$ to the first factor we obtain

$$\mathbb{E}[\mathrm{e}^{-sX} \mid A \subseteq V_p] \geqslant \mathbb{E}[1 - sY_A \mid A \subseteq V_p] \cdot \Psi(s)$$

for every $A \subseteq V$ and by plugging this into (A.1) we arrive at

$$\begin{aligned} -\frac{\Psi'(s)}{\Psi(s)} &\geqslant \sum_{A \subseteq V} w(A)\, \mathbb{P}(A \subseteq V_p)\, \mathbb{E}[1 - sY_A \mid A \subseteq V_p] \\ &= \sum_{A \subseteq V} w(A)\, \mathbb{P}(A \subseteq V_p) - s \sum_{A \cap B \neq \varnothing} w(A)\, w(B)\, \mathbb{P}(A \cup B \subseteq V_p) \\ &= \mathbb{E}X - s\Delta\,. \end{aligned}$$

Integrating over s and taking $\Psi(0) = 1$ into account we conclude

$$\log\big(\Psi(u)\big) = \int_0^u \frac{\Psi'(s)}{\Psi(s)}\,\mathrm{d}s \leqslant \int_0^u \big(s\Delta - \mathbb{E}X\big)\,\mathrm{d}s = \frac{u^2\Delta}{2} - u\mathbb{E}X$$

for every $u \in \mathbb{R}_{\geqslant 0}$. Finally, Markov's inequality implies

$$\begin{aligned}\mathbb{P}\big(X \leqslant \mathbb{E}X - t\big) &= \mathbb{P}\big(\mathrm{e}^{-uX} \geqslant \mathrm{e}^{u(t-\mathbb{E}X)}\big) \leqslant \exp\big(u(\mathbb{E}X - t)\big)\,\mathbb{E}[\mathrm{e}^{-uX}] \\ &\leqslant \exp\big(u(\mathbb{E}X - t) + u^2\Delta/2 - u\mathbb{E}X\big) = \exp(u^2\Delta/2 - tu)\end{aligned}$$

for every $u \in \mathbb{R}_{\geqslant 0}$ and the optimal choice $u = \frac{t}{\Delta}$ discloses

$$\mathbb{P}\big(X \leqslant \mathbb{E}X - t\big) \leqslant \exp\left(-\frac{t^2}{2\Delta}\right). \qquad \square$$

For bounded weight functions we deduce the following version.

Corollary A.2. *Suppose that $|V| \geqslant m \geqslant k \geqslant 1$, where V is a finite set and k is an integer. For $p = m/|V|$ let $V_p \subseteq V$ be the binomial subset of V including every element independently and uniformly at random with probability p. If $w\colon V^{(k)} \longrightarrow [0,1]$ denotes a bounded weight function, then the random variable $X = \sum_{A \in V^{(k)}} w(A)\mathbb{1}_{A \subseteq V_p}$ satisfies*

$$\mathbb{P}\big(|X - \mathbb{E}X| \geqslant \xi m^k\big) \leqslant 3\exp\left(-\frac{\xi^2 m}{12k^2}\right)$$

for every $\xi \in (0,1)$.

Proof. In order to make Lemma A.1 applicable we set $w(A) = 0$ for every $A \in \wp(V) \smallsetminus V^{(k)}$. Now for $t = \xi m^k$ we obtain

$$\mathbb{P}\big(X \leqslant \mathbb{E}X - \xi m^k\big) \leqslant \exp\left(-\frac{\xi^2 m^{2k}}{2\Delta}\right), \tag{A.2}$$

where

$$\Delta = \sum_{\substack{A,B \in V^{(k)} \\ A \cap B \neq \varnothing}} w(A)\,w(B)\,\mathbb{P}(A \cup B \subseteq V_p) \leqslant \sum_{\substack{A,B \in V^{(k)} \\ A \cap B \neq \varnothing}} p^{|A \cup B|}.$$

Since for every $i \in [k]$ there are at most $|V|^{2k-i}$ pairs $(A,B) \in V^{(k)} \times V^{(k)}$ with the property $|A \cup B| = 2k - i$, we are thus lead to the upper bound

$$\Delta \leqslant \sum_{i=1}^{k} |V|^{2k-i} p^{2k-i} \leqslant k m^{2k-1}.$$

Therefore (A.2) implies

$$\mathbb{P}\big(X \leqslant \mathbb{E}X - \xi m^k\big) \leqslant \exp\left(-\frac{\xi^2 m}{2k}\right) \tag{A.3}$$

and to conclude the argument it suffices to prove

$$\mathbb{P}\big(X \geqslant \mathbb{E}X + \xi m^k\big) \leqslant 2\exp\left(-\frac{\xi^2 m}{12k^2}\right). \tag{A.4}$$

To this end we apply (A.3) to the weight function $\widehat{w}(A) = 1 - w(A)$ and to $\xi/2$ instead of ξ, thus learning that the random variable

$$Y = \sum_{A \in V^{(k)}} \big(1 - w(A)\big)\mathbb{1}_{A \subseteq V_p} = \binom{|V_p|}{k} - X$$

satisfies

$$\mathbb{P}\big(Y \leqslant \mathbb{E}Y - \tfrac{1}{2}\xi m^k\big) \leqslant \exp\left(-\frac{\xi^2 m}{8k}\right).$$

Rewriting this in terms of X and taking into account that the expected value of $\binom{|V_p|}{k}$ is $p^k\binom{|V|}{k}$ we obtain

$$\mathbb{P}\left(X \geqslant \mathbb{E}X + \binom{|V_p|}{k} - p^k\binom{|V|}{k} + \frac{\xi}{2}m^k\right) \leqslant \exp\left(-\frac{\xi^2 m}{8k}\right). \tag{A.5}$$

As we shall prove below, the number

$$m^+ = m\left(1 + \frac{\xi}{2k}\right)$$

satisfies

$$\binom{m^+}{k} \leqslant p^k\binom{|V|}{k} + \frac{\xi}{2}m^k. \tag{A.6}$$

Assuming this estimate for a moment, we conclude from (A.5) that

$$\begin{aligned}
&\mathbb{P}\big(X \geqslant \mathbb{E}X + \xi m^k \text{ and } |V_p| \leqslant m^+\big) \\
&\qquad \leqslant \mathbb{P}\left(X \geqslant \mathbb{E}X + \binom{m^+}{k} - p^k\binom{|V|}{k} + \frac{\xi}{2}m^k \text{ and } |V_p| \leqslant m^+\right) \leqslant \exp\left(-\frac{\xi^2 m}{8k}\right).
\end{aligned}$$

Together with Chernoff's inequality this yields

$$\begin{aligned}
\mathbb{P}\big(X \geqslant \mathbb{E}X + \xi m^k\big) &\leqslant \mathbb{P}(|V_p| > m^+) + \mathbb{P}\big(X \geqslant \mathbb{E}X + \xi m^k \text{ and } |V_p| \leqslant m^+\big) \\
&\leqslant 2\exp\left(-\frac{\xi^2 m}{12k^2}\right),
\end{aligned}$$

which concludes the proof of (A.4) and, hence, of Corollary A.2.

Now it remains to deal with (A.6). Since $p = m/|V| \leqslant 1$ we have $p(|V| - j) \geqslant m - j$ for every $j \in [0, k-1]$ and multiplying these estimates we infer $p^k\binom{|V|}{k} \geqslant \binom{m}{k}$. Thus it suffices to prove

$$\binom{m^+}{k} - \binom{m}{k} \leqslant \frac{\xi}{2}m^k. \tag{A.7}$$

Applying the mean value theorem to the increasing function $x \longmapsto \binom{x}{k}$ we obtain

$$\binom{m^+}{k} - \binom{m}{k} \leqslant \frac{(m^+ - m)(m^+)^{k-1}}{(k-1)!}\,,$$

so (A.7) is a consequence of

$$\left(1 + \frac{\xi}{2k}\right)^{k-1} \leqslant k!\,,$$

which is clear for $k = 1$ and which for $k \geqslant 2$ follows from

$$\left(1 + \frac{\xi}{2k}\right)^{k-1} \leqslant \mathrm{e}^{(k-1)/2k} \leqslant \sqrt{\mathrm{e}} \leqslant 2\,. \qquad \square$$

The following consequence of this result is utilised multiple times in Section 6.

Corollary A.3. *Let $m \geqslant k$ and M be positive integers, and let $\eta \in \left(0, \frac{1}{2k}\right)$. Suppose that V is a finite set and that*

$$V = B_1 \mathbin{\dot\cup} \ldots \mathbin{\dot\cup} B_\nu \mathbin{\dot\cup} Z$$

is a partition with $|B_1| = \ldots = |B_\nu| = M < \eta|V|$, $|Z| < \eta|V|$, and $\nu \geqslant m$. Let $\mathcal{S} \subseteq \{B_1, \ldots, B_\nu\}$ be an m-element subset chosen uniformly at random and set $S = \bigcup \mathcal{S}$.

(*a*) *If $Q \subseteq V^k$ has size $|Q| = d|V|^k$, then*

$$\mathbb{P}\big(\big||Q \cap S^k| - d(Mm)^k\big| \geqslant \xi(Mm)^k\big) \leqslant 12\sqrt{m}\exp\left(-\frac{\xi^2 m}{48k^{2k+2}}\right)$$

holds for every real ξ with $\max(8k^2\eta, 16k^2/m) < \xi < 1$.

(*b*) *Similarly, if G denotes a k-uniform hypergraph with vertex set V and $d|V|^k/k!$ edges, then*

$$\mathbb{P}\big(\big|e_G(S) - d(Mm)^k/k!\big| \geqslant \xi(Mm)^k/k!\big) \leqslant 12\sqrt{m}\exp\left(-\frac{\xi^2 m}{48k^{2k+2}}\right)$$

holds for every ξ with $\max(8k^2\eta, 16k^2/m) < \xi < 1$.

Proof. Notice that (*a*) implies (*b*). Indeed given a k-uniform hypergraph G we apply (*a*) to the ordered version of its set of edges defined by

$$Q = \big\{(x_1, \ldots, x_k) \in V^k \colon \{x_1, \ldots, x_k\} \in E(G)\big\}$$

and we obtain (*b*) immediately.

So it remains to verify (*a*). Intending to invoke Corollary A.2 we move from the hypergeometric distribution involved in choosing the set $\mathcal{S}$ to a binomial distribution, where we include every block B_i independently from the other ones with probability $p = m/\nu$. For this transition we introduce the following notation.

Write $\mathscr{B} = \{B_1, \dots, B_\nu\}$ for the set of *blocks* and consider the event

$$\mathfrak{X} = \left\{ \mathcal{S} \subseteq \mathscr{B} \colon \text{the set } S = \bigcup \mathcal{S} \text{ satisfies } \big| |Q \cap S^k| - d(Mm)^k \big| \geqslant \xi (Mm)^k \right\} .$$

Let $\mathcal{S}_m \subseteq \mathscr{B}$ be an m-element set chosen uniformly at random and let $\mathcal{S}_p \subseteq \mathscr{B}$ be a binomial subset containing every block independently and uniformly at random with probability $p = m/\nu$. Pittel's inequality (see, e.g., [6, eq. (1.6)]) informs us that – without any assumptions on the event $\mathfrak{X} \subseteq \wp(\mathscr{B})$ – we have

$$\mathbb{P}\left(\mathcal{S}_m \in \mathfrak{X}\right) \leqslant 3\sqrt{m}\, \mathbb{P}\left(\mathcal{S}_p \in \mathfrak{X}\right) ,$$

so it suffices to show

$$\mathbb{P}\left(\mathcal{S}_p \in \mathfrak{X}\right) \leqslant 4 \exp\left(-\frac{\xi^2 m}{48 k^{2k+2}} \right) . \tag{A.8}$$

We will exploit that most k-tuples in Q are *crossing* in the sense that their entries belong to k distinct blocks. More precisely, if $Q_\circ \subseteq Q$ denotes the set of theses crossing k-tuples, we contend that

$$\left(d - \frac{\xi}{4}\right) (M\nu)^k \leqslant |Q_\circ| \leqslant \left(d + \frac{\xi}{4}\right) (M\nu)^k . \tag{A.9}$$

To justify the lower bound we remark that at most $k|Z||V|^{k-1}$ members of Q can have an entry in Z and at most $k^2 M |V|^{k-1}$ members of Q can have two entries from the same block, whence

$$|Q_\circ| \geqslant |Q| - k|Z||V|^{k-1} - k^2 M |V|^{k-1} \geqslant (d - k\eta - k^2\eta)|V|^k \geqslant \left(d - \frac{\xi}{4}\right) (M\nu)^k .$$

For the upper bound we exploit

$$(M\nu)^k = |V \smallsetminus Z|^k \geqslant (1-\eta)^k |V|^k \geqslant (1 - k\eta)|V|^k ,$$

which yields

$$|Q_\circ| \leqslant |Q| = d|V|^k \leqslant \left(d + \frac{\xi}{4}\right) (1 - k\eta)|V|^k \leqslant \left(d + \frac{\xi}{4}\right) (M\nu)^k .$$

Thereby (A.9) is proved. Now we decompose

$$|Q_\circ| = \sum_{\{i(1),\dots,i(k)\} \in [\nu]^{(k)}} W\big(i(1), \dots, i(k)\big) ,$$

where for every k-element set $\{i(1), \dots, i(k)\} \in [\nu]^{(k)}$ the number of k-tuples in $Q_\circ$ with one entry from each of the blocks $B_{i(1)}, \dots, B_{i(k)}$ is denoted by $W\big(i(1), \dots, i(k)\big)$. These numbers are bounded by

$$0 \leqslant W\big(i(1), \dots, i(k)\big) \leqslant k! M^k .$$

Bearing in mind that Corollary A.2 requires normalised weights, we set

$$w\big(i(1),\dots,i(k)\big) = \frac{W\big(i(1),\dots,i(k)\big)}{k!M^k}$$

for every k-set $\{i(1),\dots,i(k)\} \in [\nu]^{(k)}$. As a consequence of (A.9), the expectation of the random variable

$$X = \sum_{A\in[\nu]^{(k)}} w(A)\mathbb{1}_{A\subseteq[\nu]_p} = \frac{|S_p^k \cap Q_\circ|}{k!M^k}\,,$$

where $S_p = \bigcup \mathcal{S}_p$, is

$$\mathbb{E}X = \frac{|Q_\circ|p^k}{k!M^k} = \frac{(d\pm\xi/4)m^k}{k!}\,.$$

Therefore, Corollary A.2 applied to $\xi/(2k!)$ here in place of ξ there yields

$$\mathbb{P}\left(\big||S_p^k\cap Q_\circ| - d(Mm)^k\big| \geqslant (3/4)\xi(Mm)^k\right) \leqslant 3\exp\left(-\frac{\xi^2 m}{48k^{2k+2}}\right)\,.$$

So to conclude the proof of (A.8) is certainly suffices to show

$$\mathbb{P}\left(\big|S_p^k\cap(Q\smallsetminus Q_\circ)\big| \geqslant (1/4)\xi(Mm)^k\right) \leqslant \exp\left(-\frac{m}{48k^2}\right)\,.$$

Now Chernoff's inequality yields

$$\mathbb{P}\big(|\mathcal{S}_p| > (1+1/k)m\big) \leqslant \exp\left(-\frac{m}{48k^2}\right)$$

and for this reason it suffices to prove the deterministic statement that for every $\mathscr{A}\subseteq\mathscr{B}$ with $|\mathscr{A}|\leqslant m(1+1/k)$ the set $A=\bigcup\mathscr{A}$ satisfies

$$|A^k\cap(Q\smallsetminus Q_\circ)| < (1/4)\xi(Mm)^k\,.$$

Since the k-tuples counted on the left side contain two entries from the same block, we have indeed

$$\begin{aligned}|A^k\cap(Q\smallsetminus Q_\circ)| &\leqslant k^2M|A|^{k-1} \leqslant (1+1/k)^{k-1}k^2M(Mm)^{k-1}\\ &< (4k^2/m)(Mm)^k < (\xi/4)(Mm)^k\,,\end{aligned}$$

where the last inequality uses our assumed lower bound on ξ. □

Acknowledgement. We would like to thank the referee for dealing with this article very efficiently and for many constructive suggestions.

References

[1] G. R. Blakley and P. Roy, *A Hölder type inequality for symmetric matrices with nonnegative entries*, Proc. Amer. Math. Soc. **16** (1965), 1244–1245. MR0184950 ↑3.1

[2] G. A. Dirac, *Some theorems on abstract graphs*, Proc. London Math. Soc. (3) **2** (1952), 69–81. MR0047308 (13,856e) ↑1.1

[3] P. Erdős, *On extremal problems of graphs and generalized graphs*, Israel J. Math. **2** (1964), 183–190, DOI 10.1007/BF02759942. MR183654 ↑1.2, 5.1, 5.1, 5.2, 5.2, 5.2

[4] P. Erdős and M. Simonovits, *Supersaturated graphs and hypergraphs*, Combinatorica **3** (1983), no. 2, 181–192. MR726456 ↑5.2

[5] J. Han and Y. Zhao, *Forbidding Hamilton cycles in uniform hypergraphs*, J. Combin. Theory Ser. A **143** (2016), 107–115, DOI 10.1016/j.jcta.2016.05.005. MR3519818 ↑1.1, 1.1, 1.1

[6] S. Janson, T. Łuczak, and A. Ruciński, *Random graphs*, Wiley-Interscience Series in Discrete Mathematics and Optimization, Wiley-Interscience, New York, 2000. MR1782847 ↑4, A, A

[7] G. Y. Katona and H. A. Kierstead, *Hamiltonian chains in hypergraphs*, J. Graph Theory **30** (1999), no. 3, 205–212, DOI 10.1002/(SICI)1097-0118(199903)30:3<205::AID-JGT5>3.3.CO;2-F. MR1671170 ↑1.1

[8] J. Polcyn and Chr. Reiher, 2018. Personal communication. ↑1.2, 5.1

[9] J. Polcyn, Chr. Reiher, and B. Schülke, *On Hamiltonian cycles in hypergraphs with dense link graphs*. Preprint. ↑1.1

[10] Chr. Reiher, V. Rödl, A. Ruciński, M. Schacht, and E. Szemerédi, *Minimum vertex degree condition for tight Hamiltonian cycles in 3-uniform hypergraphs*, Proc. Lond. Math. Soc. (3) **119** (2019), no. 2, 409–439, DOI 10.1112/plms.12235. MR3959049 ↑1.1, 1.1, 1.2, 2.2, 2.2, 2.2, 2.2, 2.3, 2.3, 2.3, 2.3, 2.3, 2.4, 2.4, 2.4, 2.4, 5.1, 5.1

[11] V. Rödl and A. Ruciński, *Dirac-type questions for hypergraphs—a survey (or more problems for Endre to solve)*, An irregular mind, Bolyai Soc. Math. Stud., vol. 21, János Bolyai Math. Soc., Budapest, 2010, pp. 561–590, DOI 10.1007/978-3-642-14444-8_16. MR2815614 (2012j:05008) ↑1.1

[12] V. Rödl, A. Ruciński, and E. Szemerédi, *A Dirac-type theorem for 3-uniform hypergraphs*, Combin. Probab. Comput. **15** (2006), no. 1-2, 229–251, DOI 10.1017/S0963548305007042. MR2195584 (2006j:05144) ↑1.1, 1.2

[13] ———, *An approximate Dirac-type theorem for k-uniform hypergraphs*, Combinatorica **28** (2008), no. 2, 229–260, DOI 10.1007/s00493-008-2295-z. MR2399020 ↑1.1

[14] ———, *Dirac-type conditions for Hamiltonian paths and cycles in 3-uniform hypergraphs*, Adv. Math. **227** (2011), no. 3, 1225–1299, DOI 10.1016/j.aim.2011.03.007. MR2799606 (2012d:05213) ↑1.1

[15] E. Szemerédi, *Is laziness paying off? ("Absorbing" method)*, Colloquium De Giorgi 2010–2012, Colloquia, vol. 4, Ed. Norm., Pisa, 2013, pp. 17–34, DOI 10.1007/978-88-7642-457-1_3. MR3089025 ↑1.2

[16] Y. Zhao, *Recent advances on Dirac-type problems for hypergraphs*, Recent trends in combinatorics, IMA Vol. Math. Appl., vol. 159, Springer, [Cham], 2016, pp. 145–165, DOI 10.1007/978-3-319-24298-96. MR3526407 ↑1.1

Adam Mickiewicz University, Faculty of Mathematics and Computer Science, Poznań, Poland

Email address: joaska@amu.edu.pl

Email address: rucinski@amu.edu.pl

Fachbereich Mathematik, Universität Hamburg, Hamburg, Germany

Email address: christian.reiher@uni-hamburg.de

Email address: schacht@math.uni-hamburg.de

Email address: bjarne.schuelke@uni-hamburg.de

Department of Mathematics, Emory University, Atlanta, USA

Email address: vrodl@emory.edu